Product data sheet
Characteristics

XXS18S1AM12
Ultrasonic sensor cylindrical M18 - Sn=1m - analog 4-20mA - SYNC - connector M12

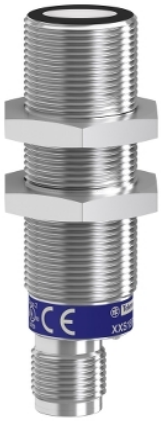

Main

Range of product	OsiSense XX
Sensor type	Ultrasonic sensor
Series name	General purpose
Sensor name	XXS
Sensor design	Cylindrical M18
Detection system	Diffuse
[Sn] nominal sensing distance	1 m adjustable with remote teach push-button
Material	Metal
Type of output signal	Analogue
Wiring technique	5-wire
Analogue output function	4...20 mA
[Us] rated supply voltage	12...24 V DC with reverse polarity protection
Electrical connection	Male connector M12 5 pins
[Sd] sensing range	0.105...1 m
IP degree of protection	IP67 IP65 conforming to IEC 60529

Complementary

Enclosure material	Stainless steel 316L
Front material	Epoxy Rubber Resin
Supply voltage limits	10...30 V DC
Function available	With synchronisation mode Software configurable
[Sa] assured operating distance	0.105...1 m (teach mode)
Blind zone	105 mm
Transmission frequency	200 kHz
Repeat accuracy	0.1 %
Deviation angle from 90° of object to be detected	-7...7 °
Minimum size of detected object	Cylinder diameter 1 mm at 600 mm
Status LED	1 LED (green) for echo state 1 LED (yellow) for output state
Current consumption	30 mA
Maximum switching capacity	250 Ohm with 12 V DC overload and short-circuit protection 850 Ohm with 24 V DC
Voltage drop	<= 2 V
Setting-up	Teach mode
Delay first up	<= 180 ms
Delay recovery	<= 100 ms
Marking	CE
Threaded length	45 mm
Height	18 mm
Width	18 mm
Depth	64 mm
Product weight	0.05 kg

The information provided in this documentation contains general descriptions and/or technical characteristics of the performance of the products contained herein.
This documentation is not intended as a substitute for and is not to be used for determining suitability or reliability of these products for specific user applications.
It is the duty of any such user or integrator to perform the appropriate and complete risk analysis, evaluation and testing of the products with respect to the relevant specific application or use thereof.
Neither Schneider Electric Industries SAS nor any of its affiliates or subsidiaries shall be responsible or liable for misuse of the information contained herein.

Environment

Standards	EN/IEC 60947-5-2 UL 508 CSA C22.2 No 14
Product certifications	CULus Ecolab RCM EAC E2
Ambient air temperature for operation	-25...70 °C
Ambient air temperature for storage	-40...80 °C
Vibration resistance	+/-1 mm conforming to IEC 60068-2-6 10...55 Hz
Shock resistance	30 gn in all 3 axes for 11 ms conforming to IEC 60068-2-27
Resistance to electrostatic discharge	8 kV level 4 conforming to IEC 61000-4-2
Resistance to electromagnetic fields	10 V/m level 3 conforming to IEC 61000-4-3
Resistance to fast transients	1 kV level 3 conforming to IEC 61000-4-4

Offer Sustainability

RoHS (date code: YYWW)	Compliant - since 1810 - Schneider Electric declaration of conformity Schneider Electric declaration of conformity
REACh	Reference contains SVHC above the threshold - Go to CaP for more details- Go to CaP for more details
Product end of life instructions	Available

XXS18S1AM12

Dimensions

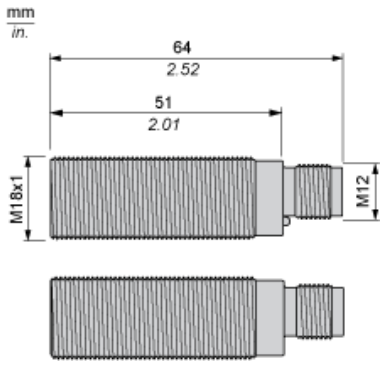

Connections

Connector Wiring

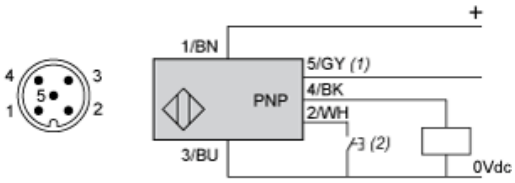

(1) : Synchronization
(2) : External setting pushbutton or XXZPB100 remote teach pushbutton.

Pin number	Wire color	Description
1	BN: Brown	+12…24VDC
2	WH: White	Input teach
3	BU: Blue	0 VDC
4	BK: Black	Output
5	GY: Grey	Synchronization

Wiring Scheme

(1) : Synchronization

4-20 mA: For 12 VDC, load ≤ 250 Ω
For 24 VDC, load ≤ 850 Ω

Wiring for the Synchronization Function (Side by Side Application)

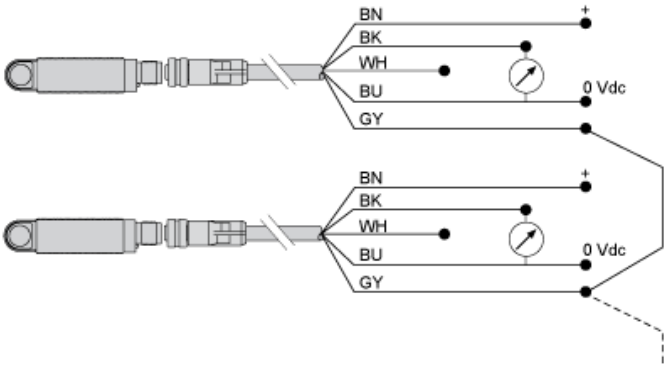

BN : Brown
WH : White
BU : Blue
BK : Black
GY : Grey

NB: To enable synchronization between several sensors, all of the wires of pin no.5 (Grey) must be electrically connected together.A maximum of 8 sensors can be synchronized. To enable “Multiplexer” function for the sensors, use the XX Configuration Software.Without synchronization or multiplexing, the sensors must be at least 50 cm away from each other in order to avoid mutual interference.

Performance Curves

Detection Curve with 100 x 100 mm / 3.94 x 3.94 in. Square Target

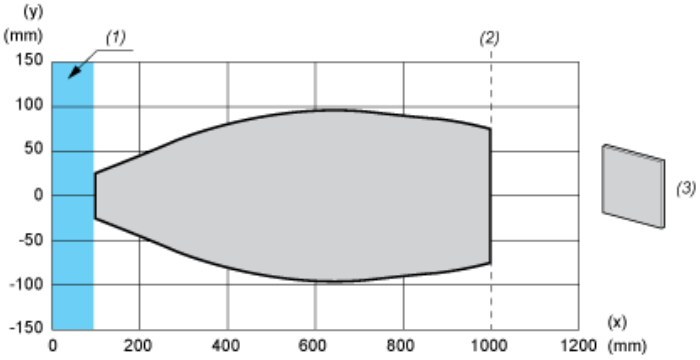

(x) Target distance
(y) Detection limit
(1) : Blind zone: 105 mm
(2) : Sn max.
(3) : 100 x 100 mm / 3.94 x 3.94 in. stainless steel plate

Detection Curve with Round Bar

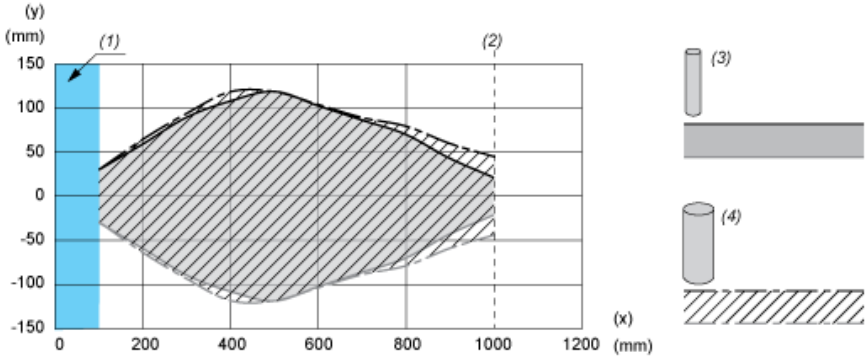

(x) Target distance
(y) Detection limit
(1) : Blind zone: 105 mm
(2) : Sn max.
(3) : Ø 10 mm / 0.394 in. stainless steel cylinder
(4) : Ø 25 mm / 0.984 in. stainless steel cylinder

Operating Diagram

Near and Far Limits Setting with Teach Procedure

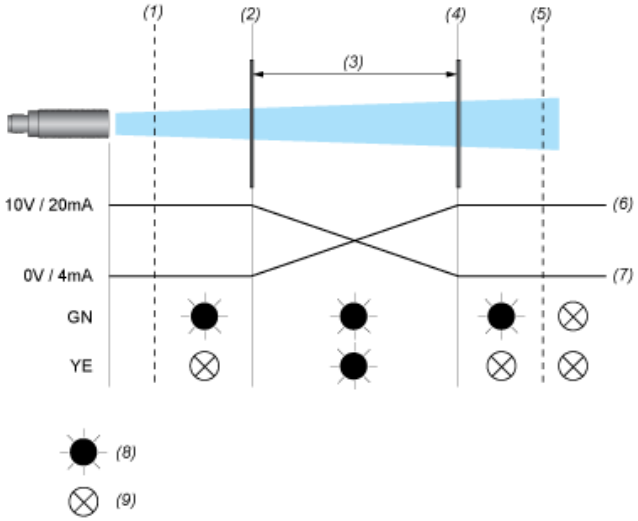

(1) : Blind zone
(2) : Near limit
(3) : Sensing window
(4) : Far limit
(5) : Sn max
(6) : Inverse
(7) : Direct
(8) : ON
(9) : OFF
GN : Green LED
YE : Yellow LED