WIDOWX ROBOTIC ARM

Visit the WidowX Product Page

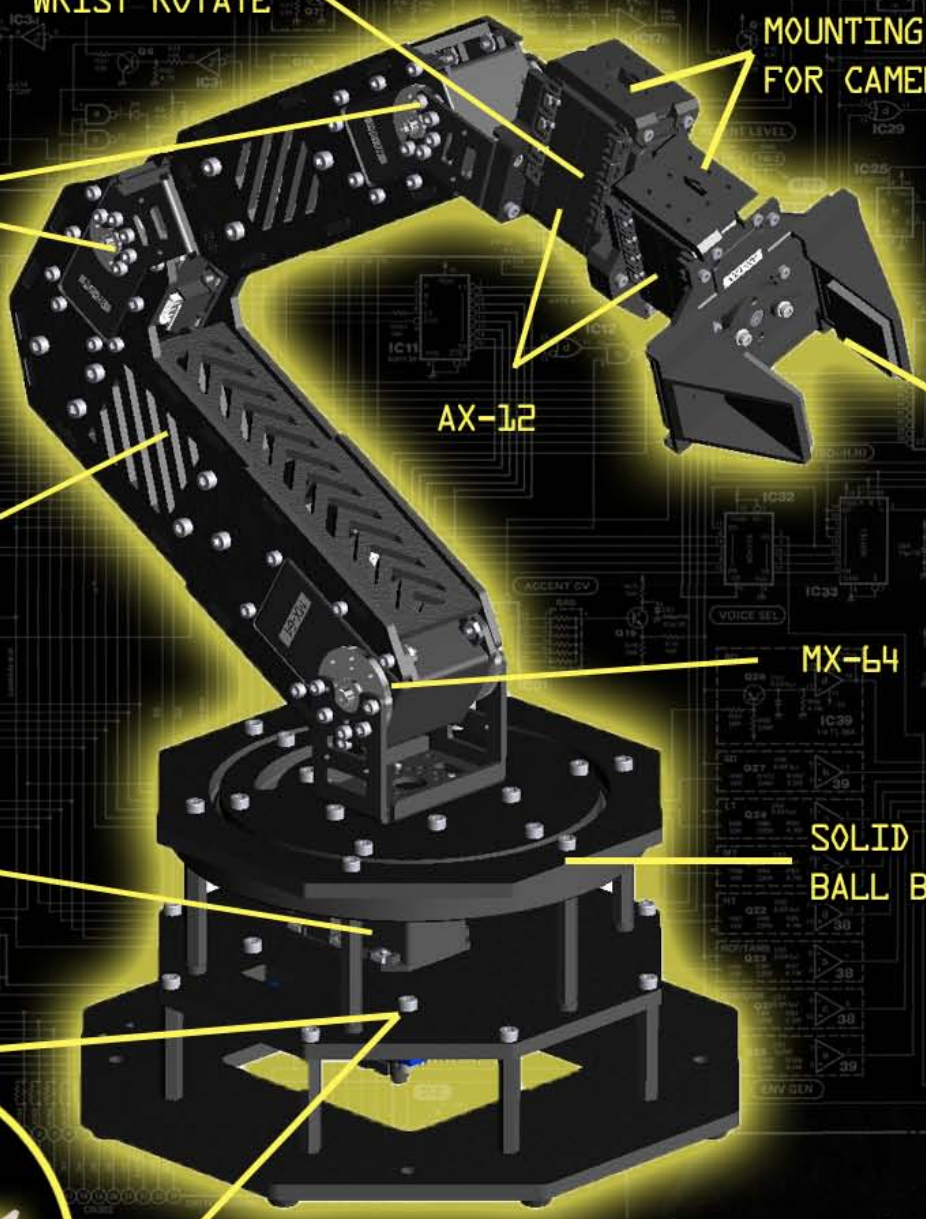

ARBOTIX MICROCONTROLLER
- ATMEL ATMEGA 644P
- DIGITAL & ANALOG I/O
- ROS READY
- XBEE WIRELESS
- ARDUINO IDE
- CUSTOM FIRMWARE

STATS

WEIGHT:	1330G (1400 W/ ROTATE)
VERT REACH:	51CM (55 W/ROTATE)
HORZ REACH:	37CM (41 W/ROTATE)
STRENGTH: (NO ROTATE)	30CM/400G
	20CM/600G
	10CM/800G
GRIPPER:	500G HOLDING STRENGTH
WRIST LIFT:	500G (400 W/ROTATE)

The WidowX Robot Arm is Interbotix Labs' entry level arm offering for the MX series of DYNAMIXEL Servos. The MX series actuators provide a full 360 degree freedom of movement in the base, ultra-high resolution of 4096 positions, user-definable PID parameters, and extremely smooth interpolation. The hefty MX-64 shoulder servo gives the WidowX very strong lifting strength in a slim frame. If you are looking for medium lifting strength and desire smooth control, high accuracy and repeatability the WidowX is a great mid-level arm choice.

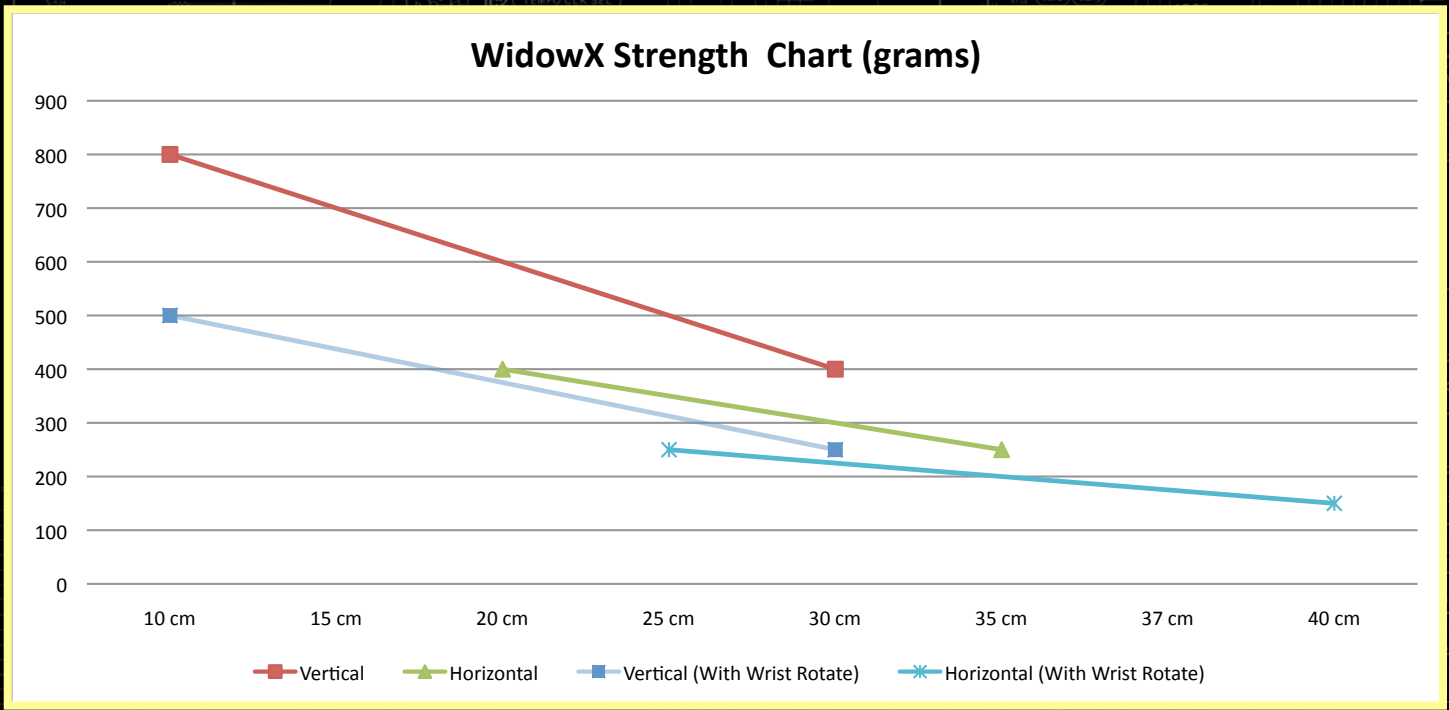

The WidowX Robot Arm has up to a 41cm horizontal reach and 29cm of vertical reach. At a 10cm reach it can lift up to 800g, and at 30cm up to 400g. The gripper itself has a rated holding strength of up to 500g, while the wrist itself can lift up to 500g horizontally. (400g if using wrist rotate).

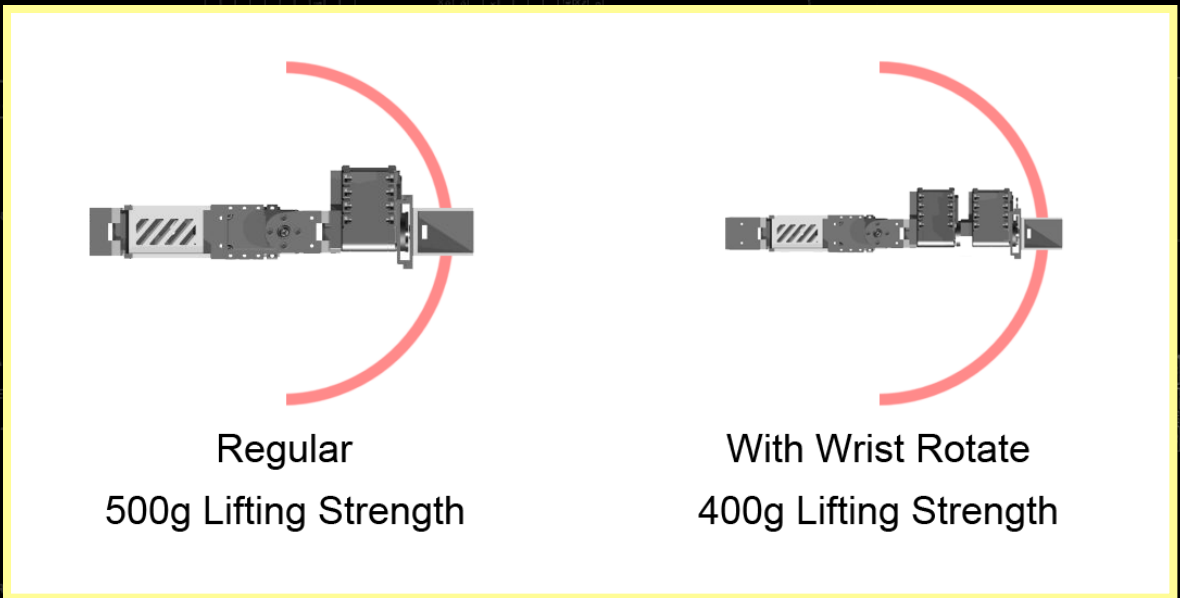

Visit the WidowX Product Page

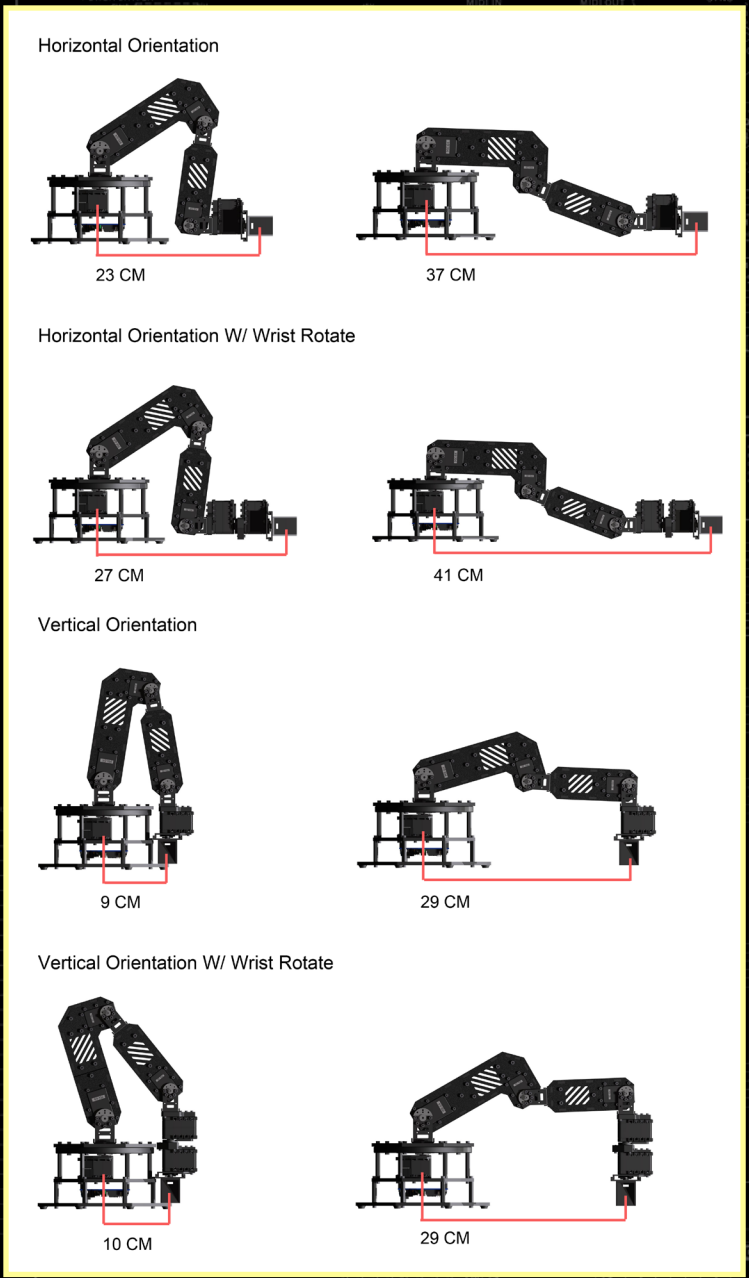

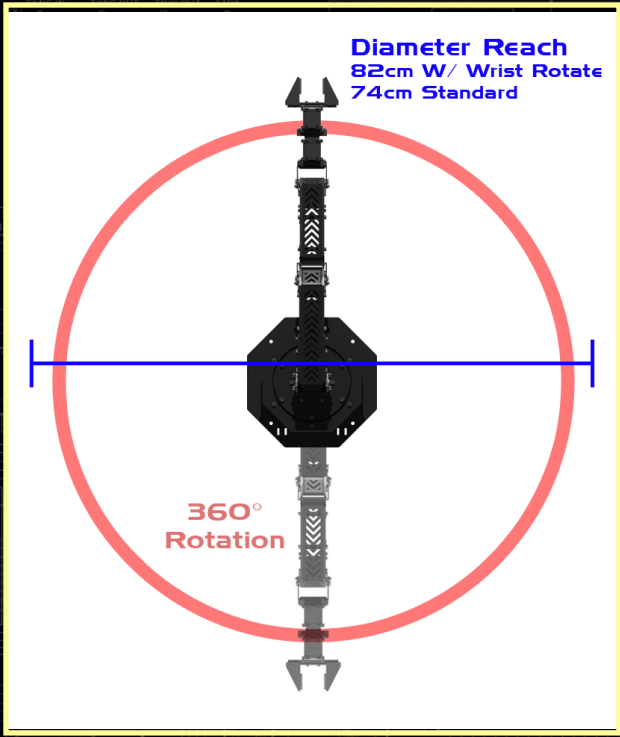

Dynamixel MX servos have 360 degrees of movement, which results in an extraordinary range of motion and reach on the WidowX. Temperature monitoring, positional feedback, as well as voltage levels, load, and compliance settings are user accessible as well.

A rugged ABS boxed frame design and 14cm diameter ball bearing rotational base ensures maximum rigidity and accuracy. Optional wrist rotate allows for up to 5 degrees of freedom, along with a custom designed parallel gripper for high precision and maximum gripping strength.

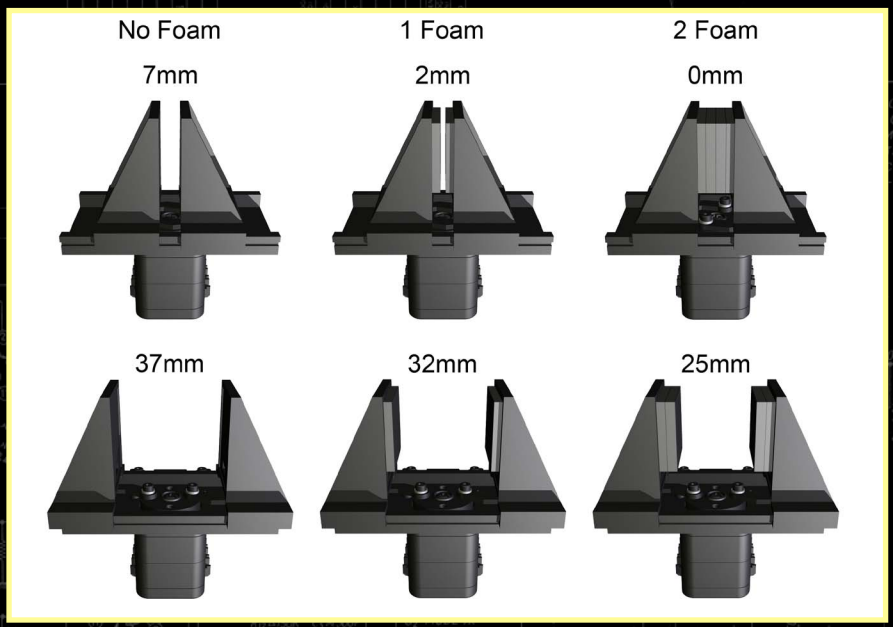

Visit the WidowX Product Page

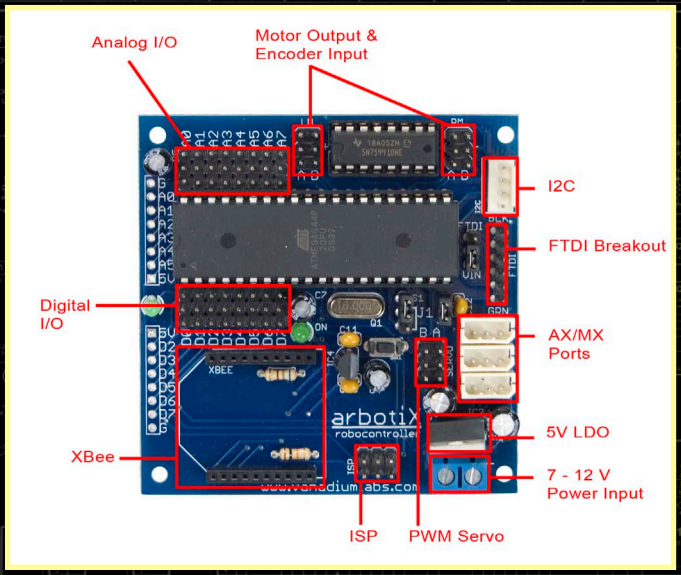

The onboard Arbotix Robocontroller can be programmed using the Arduino IDE or custom firmware, providing 8 digital and analog IOs, Xbee wireless or USB connectivity, and a powerful ATMega644p capable of handling Inverse Kinematics code onboard.

- ATMega644p Microprocessor
- 8 Analog & 8 Digital IOs
- Physical, Xbee Wireless, & USB/TTL Serial control options
- Arduino IDE compatible
- Custom firmware capable
- ROS Ready

The WidowX Robotic Arm Has Many Control Options...

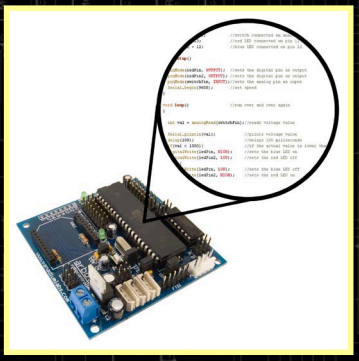

Onboard code / autonomous programming

Computer tethered USB TTL

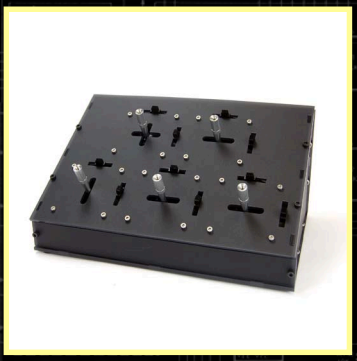

Direct drive via controls

Wireless Xbee

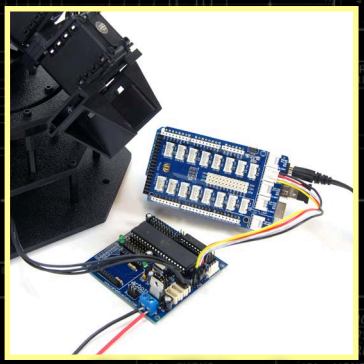

Pair w/ External Microcontroller

Handheld Controllers

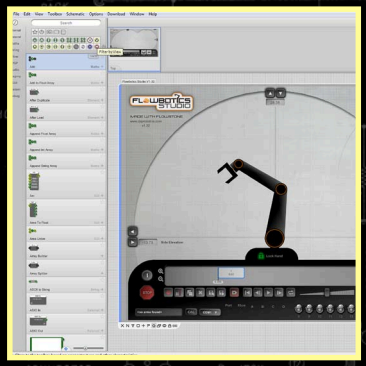

Flowstone Software

For more information on the WidowX Robotic Arm, visit the product page by clicking here.