qb robotics®

qb SoftHand INDUSTRY

USER GUIDE

Please read carefully these instructions before use. Do not discard: keep for future reference.

This page is intentionally left blank

Dear customer,
Thank you for purchasing our product.

The present document provides information at best of our knowledge at the time of publication. This document could present differences from the product and it is subject to changes without notice: the latest version is available on our webpage www.qbrobotics.com.
qbrobotics s.r.l. does not assume any responsibility for errors or omissions.
In no case qbrobotics s.r.l. will be responsible for any loss, problems or damages to persons or property arising from the use of this document.

Manifacturer:
qbrobotics s.r.l.
via Giuntini 13, 56023 Navacchio (PI), Italia

Release 1.7 17/01/2020

Summary

1 Preface

1.1 Using this document

The documentation must always be complete and in a perfectly readable state.
Keep the document accessible to the operating and, if necessary, maintenance personnel at all times.
Pass the document to any subsequent owner or user of the product.

1.2 Symbols and conventions

	**WARNING**: identifies information about practice or circumstances that can lead to damages on the device and to personal injury. Attentions help you identify a hazard, avoid a hazard, and recognize the consequence.
`Courier text`	Identifies file paths, file names and sw functions.

2 Safety

2.1 Intended use

The product design is intended for grasping objects in the weight range from 1 to 2000 g.
Fragile, sharp or sharp-edged objects shall not be grasped.
Objects having the ratio between the biggest and the smallest dimensions ≥8 and the main dimension greater than 300 mm shall not be grasped.
The product is intended for installation on robotic arms: the safety features are stablished only for use as described in this document.
The safety of the product cannot be guaranteed in case of inappropriate use. One, single, inappropriate use can result in a permanent damage to the safety of the product. The responsibility for any damage caused by an incorrect choice of the manipulated object is the responsibility of the user.

2.2 Safety instructions

WARNING:

- Check that all the content is intact after removing it from the packaging.
- The device can be used only by specially trained staff.
- Disconnect the power supply before installation, cleaning or maintenance operations.
- Make sure that no residual energy remains in the system.
- Always operate the product within the specifications defined.
- Keep away from children and pets. Always set off or unplug when not in use.
- Never use aerosol products, petroleum-based lubricants or other flammable products on or near the end-effector.

- Do not use any damaged power cable, plug, or loose outlet. It may cause damages to the product or injury to people.
- Do not touch electrical components to avoid damages due to electrostatic charges.
- Make sure the end-effector is properly and securely bolted in place and cabled.
- Do not use if damaged or defective. Do not disassemble.
- Do not insert any objects between moving parts of the fingers.
- Keep head and face outside the reach of the end-effector.
- Do not wear loose clothing or jewelry when working with the end-effector.
- Disrespect of these precautions can affect safety of the device.

2.3 EC Directives on product safety

- The following EC directives on product safety must be observed.
- If the product is being used outside the UE, international, national and regional directives must be also observed.

Machinery Directive (2006/42/EC)
The Machinery Directive is applyed to our products. The products described here are “incomplete machines”, so installation instructions are normally issued by qbrobotics.
Low Voltage Directive (2014/35/EU)
The Low Voltage Directive applies for all electrical equipment with a nominal voltage of 75 to 1500 V DC and 50 to 1000 V AC. The products described in this device manual do not fall within the scope of this directive, since they are intended for lower voltages.

2.4 Environmental conditions

Wrong environmental and operating conditions can lead to injuries, product damages and/or significant reduction to the product's life.

WARNING:
Any use or application deviating from intended use is deemed to be impermissible misuse. This includes, but is not limited to:

- Use before performing a risk assessment;
- Use outside the permissible operational conditions and specifications;
- Use in not low-dust environment;
- Use in places with high temperature or humidity;
- Use in wet places;
- Use in potentially explosive atmospheres;
- Use in medical and life critical applications;
- Use close to a human's head, face and eye area;
- Use as a climbing aid;
- Use in outdoor applications.

2.5 Environmental safety

The qb SoftHand Industry must be disposed of in accordance with the applicable national laws, regulations and standards.
All the components of this product have been chosen in accordance with the EU RoHS directive 2011/65/EU: they are produced with restricted use of hazardous substances to protect the environment.
Observe national registration requirements for importers according to EU WEEE Directive 2012/19/EU.

2.6 Personnel qualification

If the personnel working with the product is not sufficiently qualified, may occur serious injuries and damage.

- Observe the national safety regulations and rules and general safety instructions.
- Before working with the product, the personnel must have read and understood the complete assembly and operating manual.
- All work may only be performed by qualified personnel.

2.7 Power supply

The equipment must be powered from a PELV source in order to avoid electrical hazards.
Typical input power supply for external driver:

- Power: 30W;
- Voltage: from 12V to 48V.

3 Description

qb SoftHand Industry is an anthropomorphic robotic hand based on soft-robotics technology, flexible, adaptable and able to interact with the surrounding environment, objects and humans while limiting the risk of hurting the operators, spoiling the products to be handled, and damaging the robot itself.
The qb SoftHand is adaptable and can grasp different objects without any change in the control action, showing an unparalleled level of simplicity and flexibility.
Thanks to its soft nature the hand by qbrobotics exploits the principles of synergies in a simple and intrinsically intelligent design that is not only safe in unexpected human-robot interaction, but also adaptable to grasp different objects without any change in the control action.
The combination of these innovations results in a flexible prehensile device that can grasp a wide variety of objects. The single-motor actuation makes the hand plug-and-play and simple-to-control (one single motor requires one single control signal to close and open the whole hand) and affordable.

3.1 Device identification

On the rear part of the device there is its serial number, that you can read following the structure below.

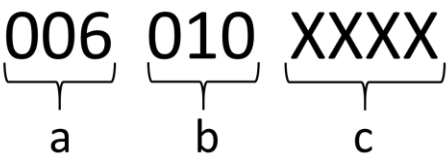

a) family
b) model
c) progressive number

4 Assembly

The qb SoftHand Industry Kit allows you to connect the device to your robot arm. The kit consists of:

- N.1 qb Softhand Industry 24V;
- N.1 external driver “G-DCWHI2.5/100EES”;
- N.1 ethernet cable “EC_CBL_UTP_6_RJ45_BLK_050”;
- N.1 power cable “EC_CBL_22_02_L50_RR_200”;
- N.1 power cable “EC_CBL_22_01_L5_RR_100”;
- N.1 STO cable “EC_CBL_26_CRMP3_WIRE_050”;
- N.1 power line communication bridge with main cable of 3m “EC_CBL_26_M8FA8_CRIMP_100”;
- N.1 USB pen drive:
    - Manual;
    - Datasheet;
- N.1 cylindrical pin EN ISO 8734 A d6x10 h6;
- N.4 metrical screws EN ISO 10642 M6x10;
- N.1 Allen hex key.

4.1 SoftHand Industry mounting

Use only the screws provided within the package. Longer screws could damage the robot or the hand. To assemble the hand on the robot arm, please follow the instructions of Table 4-1:

#	instructions	
1	Unlock by a single turn two knobs (1) and rotate the robot’s wrist (2).	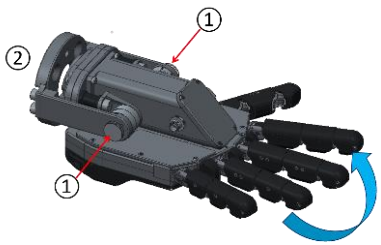

#	instructions	
2	Keep (2) as shown in figure, then tight the two knobs (1).	
3	Insert (3) into the 6 mm hole on the wrist.	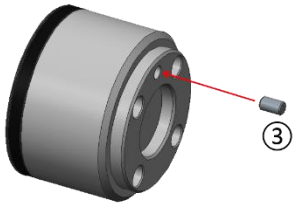
4	Center (2) on the wrist diameter 63mm,	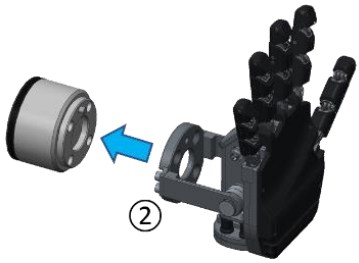
5	Fasten (2) to the robot's wrist by tightening the four screws (4).  You need the 4mm Allen wrench.	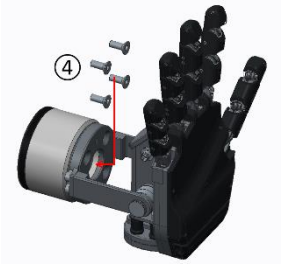

#	instructions	
6	Unlock by one turn two knobs (1) and rotate the device until the desired position.	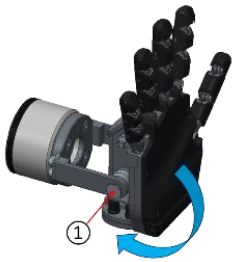
7	Fix the device by tightening the 2 knobs (1).	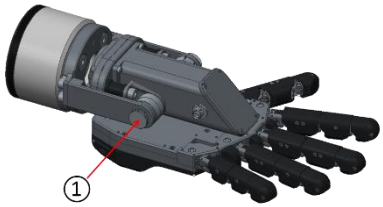

Table 4-1 Installation guidelines of the SoftHand Industry on robot arm. Referring to the balloons in the pictures: (1) n.2 knobs M4; (2) SoftHand Industry flange ISO9409-1-50-4-M6; (3) n.1 cylindrical pin EN ISO 8734 A d6x10 h6; (4) n.4 metrical screws EN ISO 10642 M6x12.

4.2 Cable connections

WARNING: do not use force on the cables to remove the wiring. Act only on the connectors. Use only the provided set of cables.

4.2.1 Set of cables

The provided cables are:

- Ethernet cable “EC_CBL_UTP_6_RJ45_BLK_050”

Figure 4-1 Ethernet cable.

- Power cable “EC_CBL_22_02_L50_RR_200”

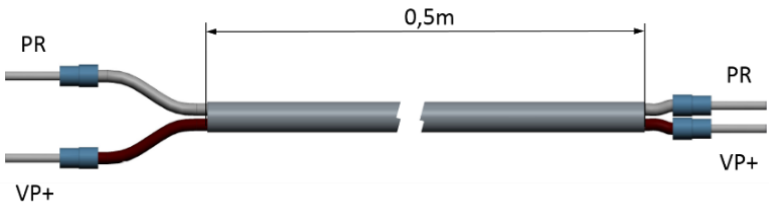

Figure 4-2 Power cable to supply the external driver.

- Power cable “EC_CBL_22_01_L5_RR_100”

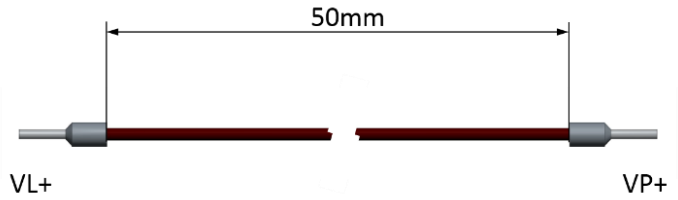

Figure 4-3 Power cable to supply auxiliary port.

- STO cable “EC_CBL_26_CRMP3_WIRE_050”

This cable has a free end to allow the user to connect to a generic terminal block.

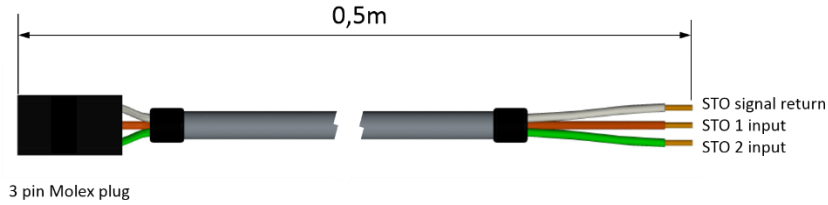

Figure 4-4 Cables with connector and pin-out.

Activation of the Safe Torque Off (STO) function causes the drive to stop providing power, which controls the motor movement and the motor can only be electrically activated, when both STO inputs are active.
The STO may be used to prevent unexpected motor rotation while the drive remains connected to a power supply.

Whenever one of the inputs is no longer active, power that can generate motion is no longer provided to the motor by the drive.

The STO cable must be connected to a safety device and you can connect it in two ways:

Conn. A) Connection to Robot control box. In this way the STO is managed by the control box and its safety protocols.

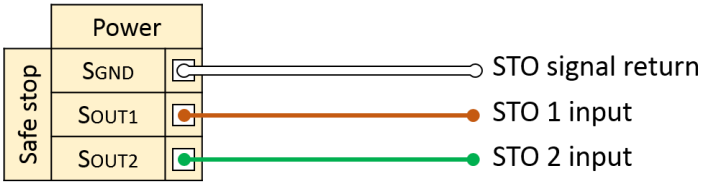

Conn. B) External power connection. In this way you can keep the motor enabled and you have to turn off the external power source to disable it.

- Main cable “EC_CBL_26_M8FA8_CRIMP_100”

Figure 4-5 Main cable to connect the Device to the external driver.

The pinning of the female M8 connector, 8 poles, is given below:

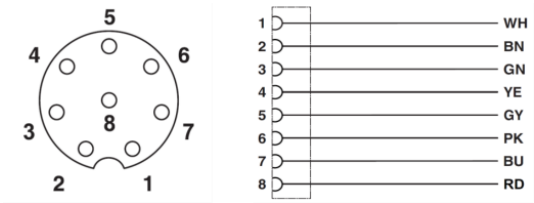

Figure 4-6 Pinning and contacts of the M8 8 pin female connector.

Referring to Figure 4-6, the connections are the following:

Pin n.	Wire color	Purpose
1	White	SSI 5 VDC
2	Brown	SSI GND
3	Green	SSI clock +
4	Yellow	SSI clock -
5	Gray	SSI data +
6	Pink	SSI data -
7	Blue	motor phase 1
8	Red	motor phase 2

Table 4-2 Signals and power connections.

4.2.2 Driver ports

Figure 4-7 shows the provided external driver with the indication of the ports; Table 4-3 External Driver ports. indicates the characteristics of each port.

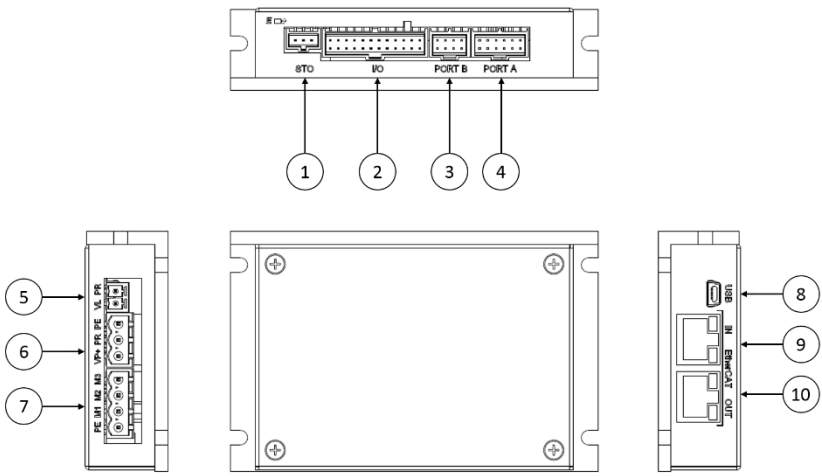

Figure 4-7 External driver.

Port n.	Type	Function	Pins
1	2.54 mm Pitch Molex	STO	3
2	2.54 mm Pitch Molex	Feedback port C and I/O	24
3	2.54 mm Pitch Molex	Feedback port B	8
4	2.54 mm Pitch Molex	Feedback port A	12
5	Phoenix 3.81 mm Pitch 'HC'	Auxiliary supply input	2
6	Phoenix 5 mm Pitch 'HC'	Main Power	3
7	Phoenix 5 mm Pitch 'HC'	Motor phases	4
8	USB Device Mini-B	USB	5
9	EtherCAT in	RJ-45	8
10	EtherCAT out	RJ-45	8

Table 4-3 External Driver ports.

4.2.3 Connection sequence

#	instructions	
1	Assembly the motor phases of the main cable to the 4-pin connector for the port 7; block the cables turning clockwise the two screws. Make sure to connect the red cable to the **M2** pin and the blue cable to the **M3** pin. **WARNING**: Pay attention to connect cables in the correct way. You need the flathead screwdriver.	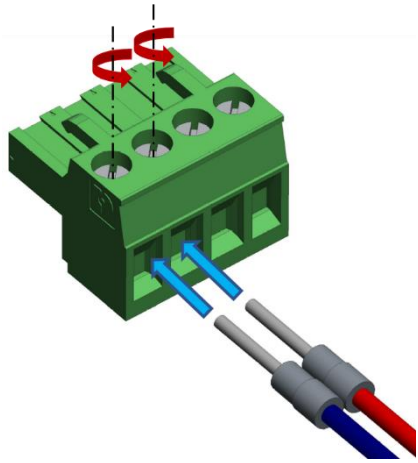
2	Assembly the main cable to the external driver. Connect the 12-pin Molex plug to the port **4** and the 4-pin connector to the port **7**.	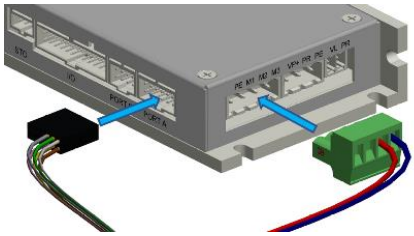
3	Connect the STO plug to the external driver port **1.**	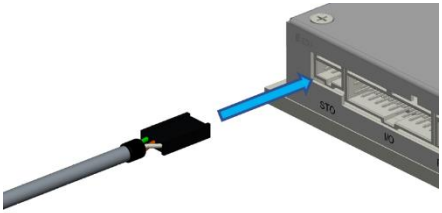

#	instructions	
4	Assembly the power cables to the 3-pin connector for the port 6 and the 2-pin connector for the port 5; block the cables turning clockwise the three screws. Make sure to connect the two brown cables to the **VP+** pin, the white cable to the **PR** pin and the other end of brown cable to the **VL+** pin. **WARNING**: Pay attention to connect cables in the correct way. You need the flathead screwdriver.	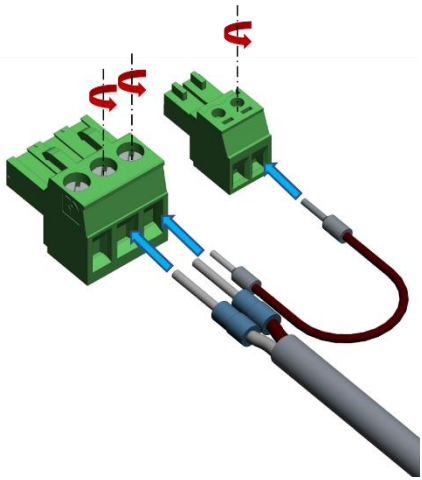
5	Connect the power cable to the port 5, by the 2-pin connector and the power cable to the port **6**, by the 3-pin connector. Driver nominal voltage **24V** (min 12V, max 95V)	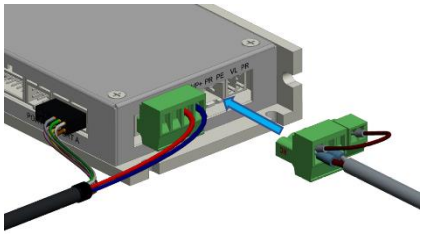
6	Connect the Ethernet cable to the port **9**.	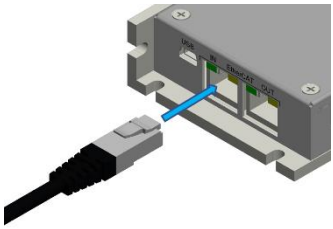

#	instructions	
7	Insert the M8 connector (4) of the main cable into the receptacle on the hand. Lock the M8 connector by manually tightening its threaded ring on the body of the receptacle (max tightening torque= 0.2 Nm). **WARNING**: Be careful to insert the connector in the right direction; Do not rotate the M8 connector when inserted into the receptacle; Minimum curve radius of the cable (4) = 51mm.	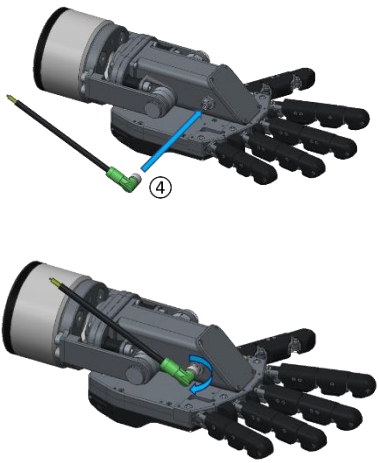

Table 4-4 Assembly sequence of the cables.

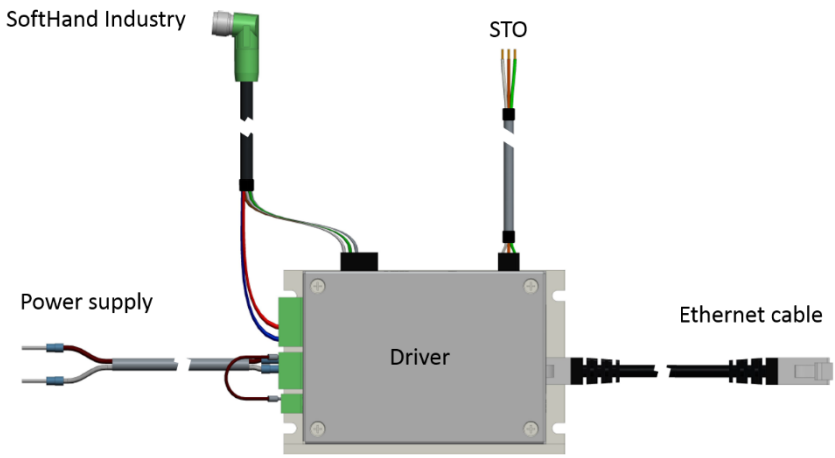

Figure 4-8 Connection layout for the external driver.

4.2.4 Digital I/Os cable “EC_CBL_26_CRMP24_WIRE_050” (OPTIONAL)

In the event that it is not possible (or do not want) to control the SoftHand Industry via the methods described in next chapters of this manual, it is possible to use a generic industrial PLC with 24VDC digital inputs and outputs. You will not have access to all the features of the device, but the set of commands made available should be more than sufficient in most applications.
This cable has a free end to allow the user to connect to a generic terminal block. In the other end there is a Molex 24 pins connector, for the external driver’s port 2. Figure 4-9 shows the pin-out of the cable.

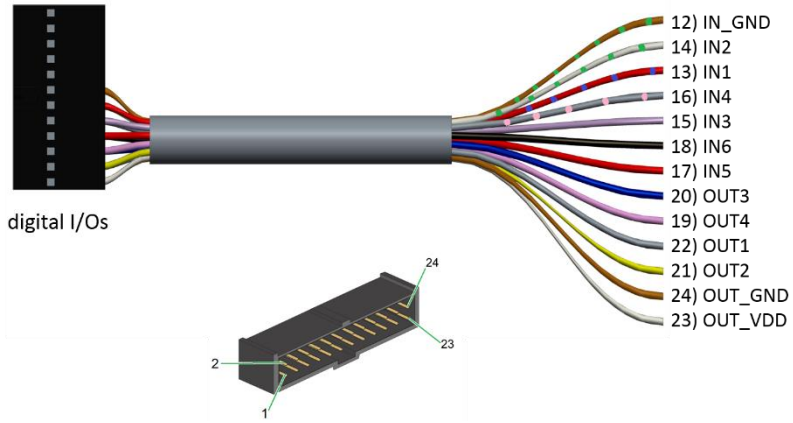

Figure 4-9 Cable with connectors and terminal block to connect the digital I/OS pins.

Example of connection to a generic PLC control

Using just two digital outputs DO1 and DO2 (at 24VDC) on the control PLC, it is possible to use the SoftHand Industry version by activating the logic states of the two outputs (Figure 4-10). For example, switching DO1 to "1", the hand will re-open completely, while setting DO2 will have a complete closure (with maximum speed and force). This is because the called functions are respectively the first and second digital inputs of the external driver of the SoftHand Industry. For all other available configurations, see the next list of entries.

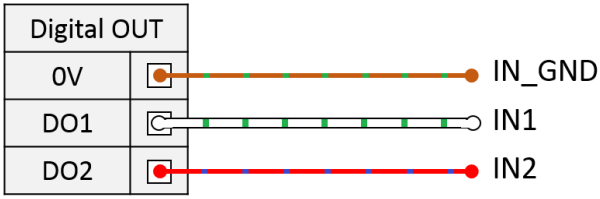

Figure 4-10 - Example of control via a generic PLC control.

In a similar way one can know the status of the driver and some auxiliary information through its digital output (Figure 4-11). For example, DI1 will be active whenever the SoftHand Industry is in a steady state, whether it is related to a socket or a rest condition (it will be at "0" when the motor will be moving). For all other states available, see the next list of outputs.

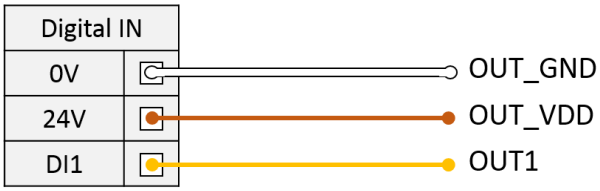

Figure 4-11 Example of status reading via a generic PLC control.

The digital inputs are:

IN_GND: digital inputs ground;
IN1: fully opening at maximum speed;
IN2: fully closing at maximum speed and force;
IN3: fully closing at 25% of speed and maximum force;
IN4: fully closing at maximum speed and 75% of force;
IN5: fully closing at 25% of speed and 75% of force;
IN6: correct termination procedure to use before switching off.

All these states are activated by a pulse of a few tenths of a second on the respective 24VDC digital input (with respect to the IN_GND which acts as a ground for digital inputs). If the input remains high, the others can still be activated, but the high one will not activate until it returns to "0" (0 VDC) and then again to "1" (24 VDC).

It is not possible to activate multiple commands simultaneously. To give the next input, the previous one must already have been completed.

The digital outputs are:

OUT1: is "0" (0VDC) when the motor is stationary;
OUT2: is "0" (0VDC) when the number of cycles exceeds the maintenance threshold;
OUT3: is "0" (0VDC) when there is an error in the program or in the driver parameters;
OUT4: is "0" (0VDC) when the driver is in protection for some electrical or mechanical problem.
OUT_VDD and **OUT_GND**: are the two references needed to define the 24VDC. Connect OUT_VDD to PLC 24V and OUT_GND to its ground reference (0V).

#	instructions	
1	Connect the Digital I/Os cable to the port 2.	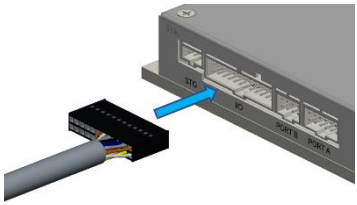

WARNING: the termination procedure (**IN6**) is called for every switching off and it's needed for the correct behavior of device and to limiting its hysteresis.

5 C++ API

5.1 Example Installation

Following this very basic installation steps you can build the example code from scratch and test the qb SoftHand Industry functionalities.

```
mkdir build
cd build
cmake ..
make
make install
```

The example code is stored under the src directory (it is called main.cpp as usual). The building process generates an executable called qbsofthand_industry_api_example in the base directory, that can be run in any terminal.

The example prompt on screen the qb SoftHand Industry information and close (and reopen) it just one time.

Before executing the example code, please be sure to have properly connected and powered the device by following the official qb SoftHand Industry User Guide.

Moreover, you need to be connected to the device through a proper ethernet network. The device default parameters are the followings so please set up your network adapter settings to fit this configuration (you may change the device network parameters later).
* Network IPv4: 192.168.1.110
* Network Mask: 255.255.255.0
* Network Gateway: 192.168.1.1
* Network DHCP: disabled

For example, you may give the 192.168.1.100 static IPv4 to your network adapter.

By exploring the simple example code above, you can understand most of the features available for the user. Moreover, the documentation of the whole library can be found both in the User Guide and in the `include/qbsofthand_industry_api/qbsofthand_industry_api.h` header file.

The C++ shared library (compiled for both 32- and 64-bit systems) can be linked against your own project to include the control capability of the qb SoftHand Industry.

If you need special architecture binaries, please make a dedicated support request at support@qbrobotics.com.

5.2 Working with C++ API

For the API the description of the class functions is:

namespace qbsofthand_industry_api_
class qbSoftHandIndustryAPI

qbSoftHandIndustryAPI()

Initialize the qb SoftHand Industry API handler by opening the proper UDP socket and by testing its communication. The constructor tries to connect to the qb SoftHand Industry for at most 30 seconds and then returns. Through the method `'isInitialized()'` is possible to test whether the initialization succeeded or not. The default IPv4 address used for the UDP socket connection is 192.168.1.110.

qbSoftHandIndustryAPI(const std::string &device_ip)

Initialize the qb SoftHand Industry API handler by opening the proper UDP socket and by testing its communication. The constructor tries to connect to the qb SoftHand Industry for at most 30 seconds and then returns. Through the method `'isInitialized()'` is possible to test whether the initialization succeeded or not.

device_ip

The IPv4 address used for the UDP socket connection. It must be a valid IPv4 address.

~qbSoftHandIndustryAPI()

Close the UDP socket and perform the proper shutdown procedures.

float getCurrent()

Get the actual qb SoftHand Industry motor torque in percent value w.r.t. the maximum value.

float getPosition()

Get the actual qb SoftHand Industry motor position in percent value w.r.t. the maximum value.

float getVelocity()

Get the actual qb SoftHand Industry motor velocity in percent value w.r.t. the maximum value.

std::string getStatistics()

Get the qb SoftHand Industry device information.

bool isInitialized()

Return true if the initialization procedure has succeeded. **return** `true` on success.

int setClosure(const float &position)

Send the given percent-position closure command reference to the qb SoftHand Industry.

Position

the percent-position command reference, in range [0, 100] % where `0` is the fully open configuration, and `100` is the fully closed.

return `0` on success; `-1` if the position is out of range.

int setClosure(const float &position, const float &velocity, const float &current)

Send the given percent-position closure command reference to the qb SoftHand Industry, together with the speed reference command and the maximum force that should be applied during the grasp.
This is the most complete command to send a reference to the qb SoftHand and should be used for special cases. In normal usage, the simpler version above should be preferred. All the parameters are expressed in percent w.r.t. the maximum possible value.

Position
the percent-position command reference, in range [\p 0, \p 100] % where \p 0 is the fully open configuration, and `100` is the fully closed.

Velocity
the speed command reference, in range [12.5, 100] % where `12.5` is the minimum velocity of the closure, and `100` is full speed.

Current
the current threshold for the motor, in range [62.5, 100] % where `62.5` is the minimum force that the hand can apply, and `100` is the maximum **return** `0` on success; `-1` if at least one of the percent values is out of range.

int setIP(const std::string &net_ip, const std::string &net_mask, const std::string &net_gateway)

Change the qb SoftHand Industry IPv4 address, network mask and gateway of the device.
It is worth noticing that the device should be connected first to use this command.

net_ip
the device network IP address, e.g. 192.168.1.110.

net_mask
the device network mask, e.g. 255.255.255.0.

net_gateway
the device network gateway, e.g. 192.168.1.1. **return*** `0` on success; `-1` if at least one of the given IPv4-format addresses is wrong.

void waitForTargetReached()

Wait until the qb SoftHand Industry has reached the commanded position.

This method should be called after a `setClosure` one, to wait for the action to be completed.

6 Universal Robots URCap

6.1 Installation

You can find the most up-to-date installation process in the official robot manual provided by Universal Robots.

CB-Series

1. From the start view, go to "Setup Robot";
2. Then click on "URCap" to access the URCap settings;
3. Insert the provided USB flash drive and click on the "plus" at the bottom of the page;
4. From there select the flash drive, choose the file named `qbsofthand-*.*.*.urcap` in the root directory of the drive, and click "Open";
5. A reboot is needed to set the custom URCap available in robot system.

e-Series

1. From the main view, go to "Settings";
2. Then click on the tab "System" and on the sub-tab "URCap";
3. Insert the provided USB flash drive and click on the "plus" at the bottom of the page;
4. From there select the flash drive, choose the file named `qbsofthand-*.*.*.urcap` in the root directory of the drive, and click "Open";
5. A reboot is needed to set the custom URCap available in robot system.

The "asterisks" (*) in the above file names represent respectively the major, minor and bugfix numbers of the software version, e.g. `qbsofthand-3.0.0.urcap`.
To get more info about versioning, please refer to the Semantic Versioning standard.

WARNING: These steps may differ a little from the real ones. Please refer to the official robot manual in case this guide does not help you.

6.2 Working with URCap

The easiest solution to control the qb SoftHand from the Universal Robots ecosystem is to exploit the URCap capabilities provided, and well described below.
The images used in this chapter refer to the e-Series Polyscope 5+, but a very similar interface is available in Polyscope 3+ for CB-Series robots.

6.2.1 Installation Node

The qbrobotics Installation tab is the place where all the information about the qb SoftHand state and its stored settings are displayed all together.

Device Status Panel

The Device Status panel shows a led icon on its top right corner to quickly identify the connection state:

- Red is for communication fault or non-connected device;
- Green, when everything looks good.

If there is a connection problem, the "Reconnect" button is enabled to manually reset the communication to the robot controller.

In the same panel are shown the identification name of the device and the IP address on which it is connected, e.g. “192.168.1.110”.

Below, the actual motor current in percent value w.r.t. to maximum one and the actual hand closure state in percent value. If a program is running while visiting the Installation Node, you can see these status bar varying accordingly to the hand motion.

Teaching Mode Panel

To simplify the usability and re-usability of qb SoftHand, you can teach and store a given grasp value to recall it whenever you need it in a given Program Node.

For each, you can set the grasp command value through a percent position slider, and you can test it buy pressing the "Grasp" button on the right of the chosen line. If you are not happy with the given closure, just iterate this procedure until you are fine with the teached grasp. All of this named grasp value can be recalled by every Program Node at any time.

If a stored grasp previously set is modified at a given time, all its occurrences used in any program are modified accordingly to the new value set. This is possible thanks to a grasp database saved in the current Installation loaded.

WARNING: If you change or remove an Installation file on your robot you may not be able to exploit this linking capability any longer because the stored grasp database no longer exists. On the other hand, each saved program still behaves the same as before because each qb SoftHand Program Node stores the grasp value also inside the program data.

As it is shown in Figure 6-1, you can quickly and easily add or remove a grasp value, which is visualized in a tabled fashion.

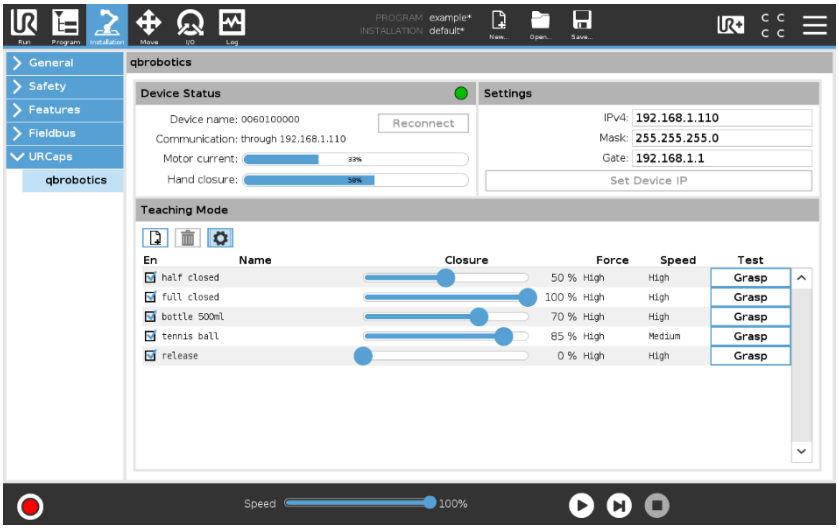

Figure 6-1 URCap installation interface.

6.2.2 Program Node

This Node aimed to send a command to the qb SoftHand at a given time in a robot program.

Teaching Mode Panel

This panel is strictly linked to the one in the Installation Node since you can recall, add, modify or remove a stored grasp value from the internal database. The value shown in the slider is the one sent to the qb SoftHand while the program is running.

If you have selected a stored grasp and change its command value through the slider, you change not only the current Program Node value, but every linked grasp with the same name.

While creating a robot program, you can check if the grasp command is suitable by testing it through the "Grasp" button on the top right of the panel.

Settings Panel

If you are grasping an object with a known mass, you can add it in the proper field to automatically sum it up with the qb SoftHand one. Remember to set it to 0 when you release the object.

Additionally, you can specify if this Node has to add a wait during the grasp or not. You can choose one of the two predefined options:

- Wait for a given amount of time expressed in seconds;
- Wait until the grasp is stable.

If none are satisfying for the given application, feel free to add a Wait Node after the qb SoftHand one.
If both the options are selected, they are evaluated in sequence: first it waits for the specified custom time and then checks whether the grasp is already stable or not.

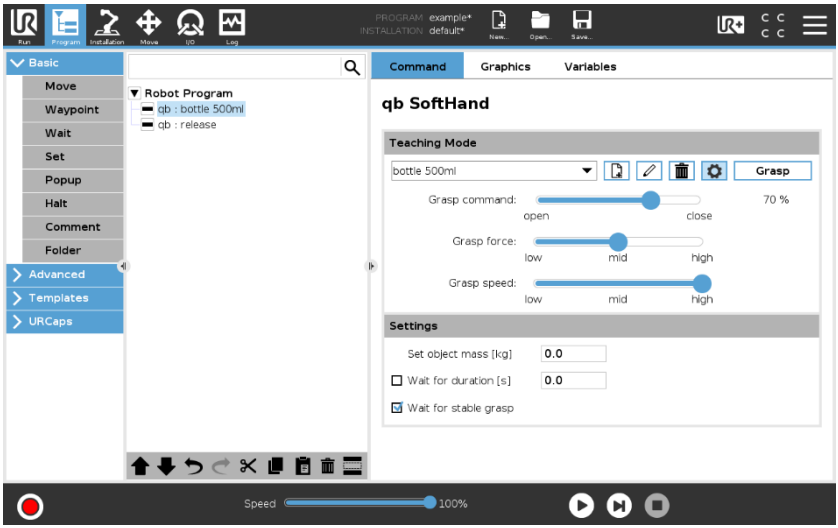

Figure 6-2 URCap programming interface.

6.2.3 e-Series Toolbar

This toolbar lets you quickly check the qb SoftHand state and tech new grasp values.
The two panels displayed are almost identical to the ones described in the Installation and Program Nodes.

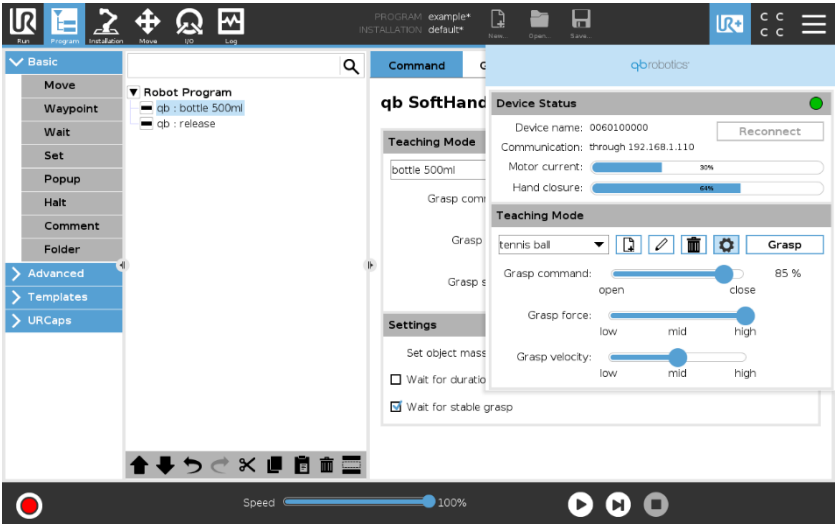

Figure 6-3 URCap toolbar.

6.2.4 Program Example

The following example is a simple pick-and-place robot program where the qb SoftHand is used as grasping tool.

The example should be self-explainatory, but it is worth noticing that in many cases a "pre-grasp" can help to accomplish a task in a better fashion. This is strictly related to the specific task, but you can add as many qb SoftHand Program Nodes as you need to let the hand pass in an even narrow spot. For example, you may need a pre-grasp to be able to open a door through its handle.

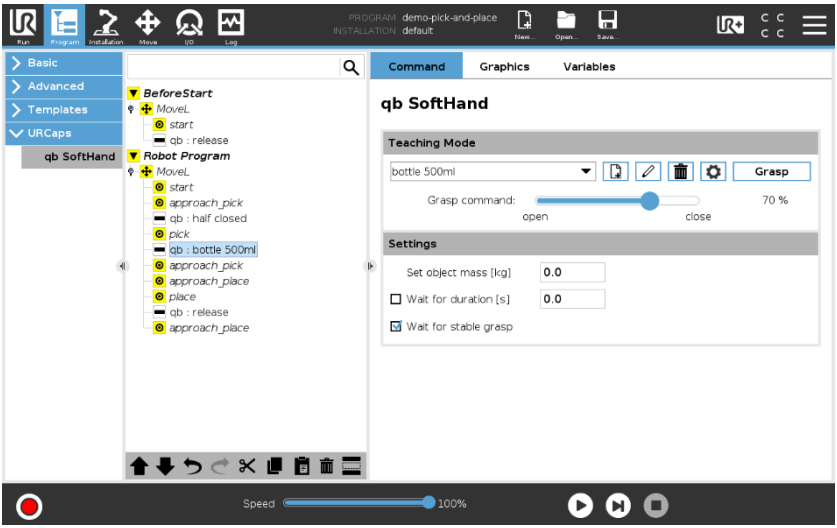

Figure 6-4 URCap programming example.

6.2.5 URCap enabled script functions

Apart from the UI features described above, you can add some custom function in your robot program by using our script methods:

- `bool qbsofthand.industry_connect(string ip_address)`: opens the UDP socket on the given IPv4 address and tests its communication.
- `void qbsofthand.industry_disconnect()`: closes the UDP socket and performs the proper shutdown procedures.
- `int qbsofthand.industry_getCurrent()`: returns actual motor torque in percent value w.r.t. the maximum value.
- `int qbsofthand.industry_getPosition()`: returns actual motor position in percent value w.r.t. the maximum value.
- `string qbsofthand.industry_getStatistics()`: returns details about device internal parameters and it is mainly aimed to our support team during incident investigation.
- `bool qbsofthand.industry_isReachable()`: returns "true" if the socket communication is active and responsive.

- `void qbsofthand.industry_setCommand(int position)`: sends a reference position command to the device; the integer parameter must be a percent value, i.e. in range 0 — 100.
- `void qbsofthand.industry_setCommandFull(int position, int speed, int force)`: sends a reference position command to the device, together with a speed reference and a force threshold; all the integer parameters must be percent values, respectively in range 0 — 100, 12.5 — 100, 62.5 — 100.
- `void qbsofthand.industry_setDeviceIP(string net_ip, string net_mask, string net_gateway)`: changes the IPv4 address, network mask and gateway of the device; it is worth noticing that the device should be power off after this command.
- `void qbsofthand.industry_waitForTargetReached()`: waits until the hand has reached the commanded position; this method should be called after a '`setCommand`' one, to wait for the action to be completed.

WARNING: These commands are meant to be used by expert users only.

---

7 qb SoftHand Industry technical data

Figure 7-1 shows the overall dimensions of the qb SoftHand Industry. Electrical and Mechanical characteristics of the hand are shown in Figure 7-1 and Table 7-1.

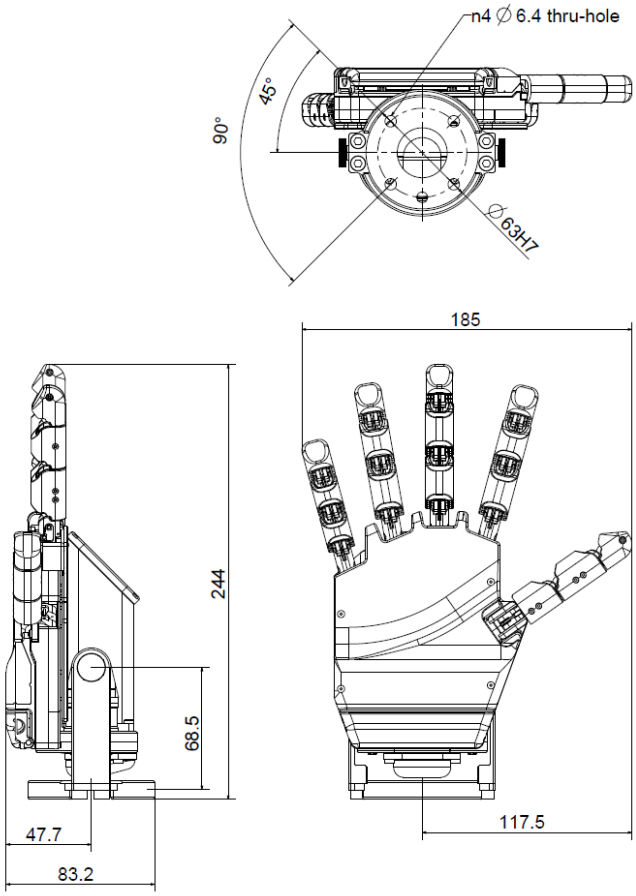

Figure 7-1 qb SoftHand Industry dimensions, which are the same for the left and right hand (dimensions in mm and out of scale).

The Figure 7-2 represents the mechanical interface coordinate system Σ_M $(O_M; X_M, Y_M, Z_M)$ of an articulated robot, as defined by ISO 9787:2013. In particular, the center of the coordinate system, O_M, is on the interface surface of the robot tool flange and the Z_M axis is coincident with the tool flange axis of symmetry.

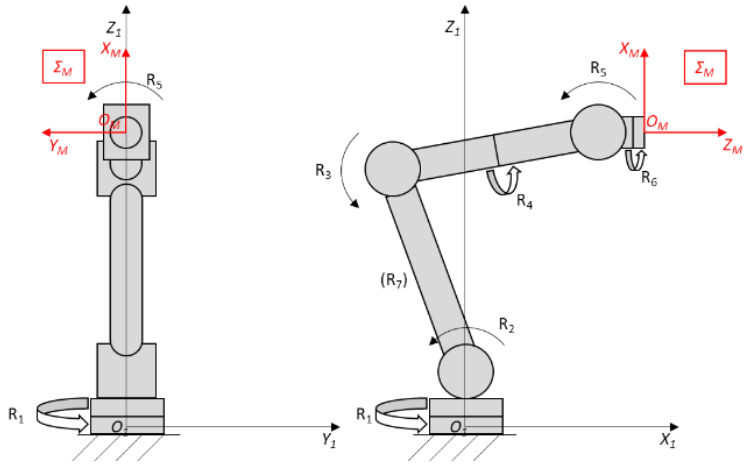

Figure 7-2 mechanical interface coordinate system Σ_M $(O_M; X_M, Y_M, Z_M)$ of a generic articulated robot. R_i is the i-th revolute joint of the robot. $(O_1; X_1, Y_1, Z_1)$ is the base coordinate system of the robot.

The system Σ_T $(O_T; X_T, Y_T, Z_T)$ is the Tool Coordinate System of the device.
The center, O_T, coincides with the center O_M. The Z_T axis is normal to the palm, outgoing positive, and the Y_T axis is normal to the flange plane.
This definition implies that Σ_T is the same for left and right one. So, the positive orientation of X_T axis will be on the side of the thumb in the right hand and on the side opposite to the thumb in the left hand.
Figure 7-3 shows the system Σ_T.

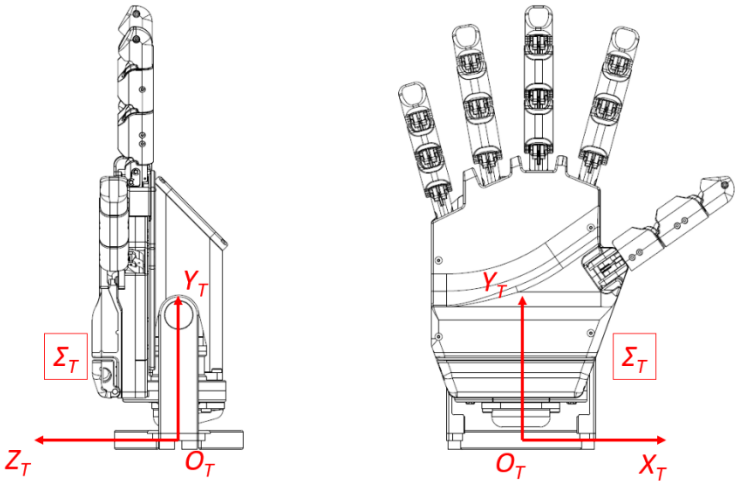

Figure 7-3 Definition of the Tool Coordinate System Σ_T $(O_T; X_T, Y_T, Z_T)$.

1external driver for best integration

Table 7-1 gives also the position of the center of mass and the inertia tensor of the SoftHand Industry respect to Σ_T $(O_T; X_T, Y_T, Z_T)$ and wrist pre-set in 0° position. All coordinate systems here described follow the orthogonal right-hand rule.

MECHANCAL	UNIT	NOMINAL	MIN	MAX
weight	[kg]	0.89	-	-
wrist mounting range	[deg]	-	0	90
wrist mounting resolution	[deg]	7.5	-	-
power grasp payload	[kg]	-	-	2.0
pinch grasp payload	[kg]	-	-	0.6
hanging payload	[kg]	-	-	5.0
full closing time	[s]	-	-	1.2

CENTER OF MASS		UNIT	X	Y	Z
coordinates system Σ_T	fully open	[mm]	2.4	80.5	14.3
	fully closed	[mm]	1.1	75.3	17.5

INERTIA TENSOR		UNIT	XX	XY	XZ	YY	YZ	ZZ
coordinates system Σ_T	fully open	[kgmm^2]	-9535	-90	335	-9888	-1449	1343
	fully closed	[kgmm^2]	-8090	-72	155	-7963	-1752	1371

ENVIRONMENTAL	UNIT	NOMINAL	MIN	MAX
operating temperature	[°C]	-	-5	50
storage temperature	[°C]	-	-20	50
noise level	[dB]	52	40	61

ELECTRICAL	UNIT	NOMINAL	MIN	MAX
operating voltage	[V]	24	12	50
power consumption	[W]	13	3	15

CONTROL
communication protocols: EtherCAT, UDP

FEATURE
plug-and-play[1]
soft, human like fingers
adjustable wrist mounting position
splash, water, and dust resistance: IP65
interchangeable glove for special applications

NORMATIVE COMPLIANCE
ISO 12100
ISO/TS 15066
ISO 13849-1/-2
ISO 10218-1/-2
ISO 9409-1-50-4-M6
ISO/TR 20218-1
IEC 60529
IEC 61000-6-2/-6-4

[1]external driver for best integration

Table 7-1 Basic data of the qb SoftHand Industry.

7.1 Fingers workspace

Figures below show the hand workspace, in particular the fingers' range.

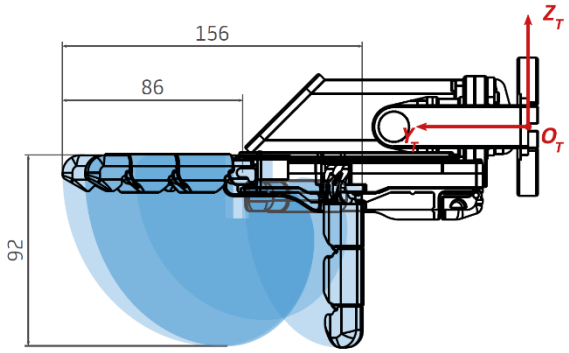

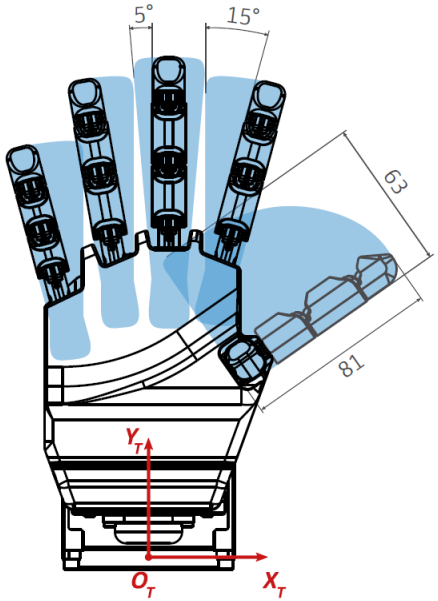

Figure 7-4 Fingers workspace (dimensions in millimeters).

7.2 Adjustable wrist

You can adjust the pitch pre-set of the wrist in twelve positions, from 0° to 90° with a step of 7.5° and without using any tool. The Figure 7-5 shows the extreme positions of the wrist: in the first position (0°) the axis Z_T is normal to the palm and in the last position (90°) the axis Y_T is normal to the palm.

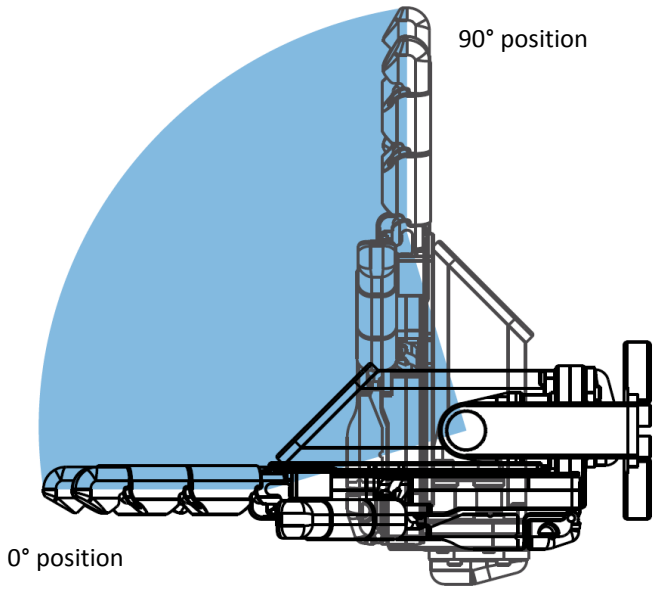

Figure 7-5 Extreme position of the wrist pre-set.

Figure 7-6 shows a top view of the hand and a detail of the locking components, with the graduated scale.

WARNING:
Do not rotate the knobs more than one turn.

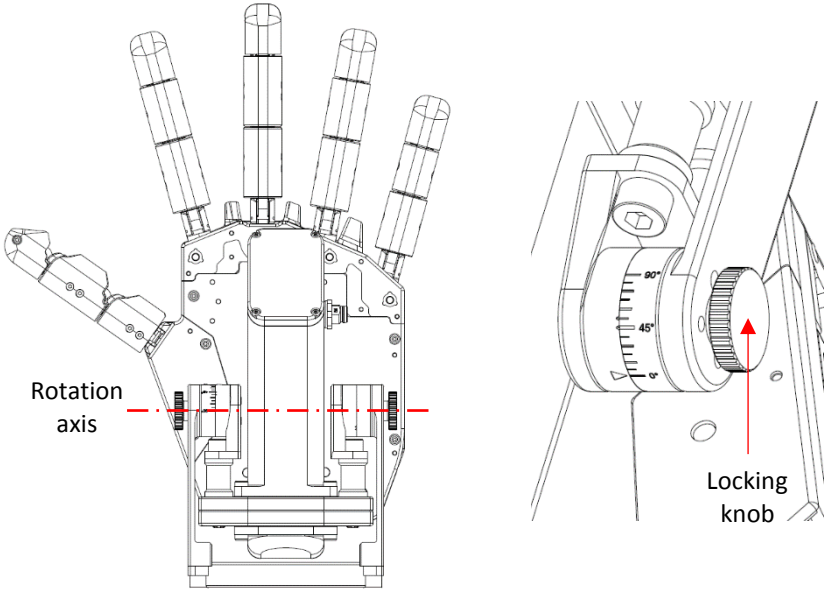

Figure 7-6 Rotation axis for wrist pre-set and locking knob to turn, in order to lock and unlock the joint. The left joint has a graduated scale to read the angular position.

Follow the sequence below to change the wrist pre-set.

1) rotate the two knobs by a single counterclockwise turn;
2) rotate the hand at the desired angle (step of 7.5°);
3) lock the joints by turning clockwise the two knobs.

This feature will help you to assemble the hand to the robot flange.

8 Maintenance and warranty

Products of the company qbrobotics s.r.l. are produced using the most modern production methods and are subject of strict quality inspections. All sales and deliveries are performed exclusively based on our General Conditions of Sale and Delivery, which can be viewed on the qbrobotics home page https://qbrobotics.com/terms-conditions/

qbrobotics s.r.l. (Seller) warrants that Products conform with specifications and free of defects in materials and workmanship. Seller will guarantee the conformity of Products within the period of one (1) year from their delivery (the "Warranty Period"). Buyer shall notify the defects to Seller within eight (8) days after the knowledge. The above-mentioned warranty will cover only the defects which appear in the Products used under proper use, care and maintenance in accordance with the instructions provided with the Product. In particular, the warranty will expire automatically in case of tampering with the device or with the software.
The warranty does not cover parts subject to wear, such as the glove, the motor tendon and the elastic bands.
Buyer, upon written consent by the Seller, shall return at his own expenses the defective Product to Seller. Seller shall repair or replace the defective Product and the repaired or replaced item shall be delivered by Seller to Buyer at Seller's cost. Insurance, taxes and levies shall be borne by Buyer. Products replaced in accordance with this clause shell be subjected to the foregoing warranty for the unexpired portion of the Warranty Period or for thirty (30) days from the date of their return to Buyer, whichever expires the later.
Unless otherwise restricted by mandatory applicable law, the warranty set forth herein is expressly in lieu of all other warranties, whether expressed or implied, including, without limitation, any and all warranties of merchantability, quality and fitness for use and for purpose, any advice and recommendation and any obligations or liabilities which may be imputed to Seller, any and all of which are hereby expressly disclaimed, denied and excluded. Buyer expressly agrees that no warranty that is not specifically stated in this agreement will be claimed or otherwise adhered to by buyer and/or by anyone acting on buyer's behalf and/or by anyone deriving the legality of its claim from buyer, nor that will any such warranty be valid.

Seller neither assumes nor authorizes any other person to assume for it, any other liability in connection with the sale, use or handling of any and all goods specified or contemplated by this document. No warranty is made with respect to any of these goods which have been subject to accident, negligence, alteration, improper care, improper storage, improper maintenance, abuse or misuse.

The duration of the warranty shall not be extended by services rendered under the terms of the warranty. Insofar as no warranty default exists, qbrobotics s.r.l. reserves the right to charge the customer for replacement or repair.
qbrobotics s.r.l. shall have no liability for indirect, incidental, consequential or special damages of any kind. These limitations are agreed allocations of risk. Under no circumstances shall Seller's liability with regard to the sale or use of the Products exceed the purchase price paid by Buyer for the Products. In particular, Seller shall have no liability in the integration of the Product provided by third party.

For any support request please contact us at the email support@qbrobotics.com.

9 Appendix

9.1 Troubleshooting

<table>
<tr><th>#</th><th>Problem</th><th colspan="2">Possible solution</th></tr>
<tr><td rowspan="3">1</td><td rowspan="3">The device presents unusual behavior or communication problems.</td><td colspan="2">Check the wiring is correct</td></tr>
<tr><td rowspan="2">Make a power cycle</td><td>If the hand is connected to the power source of the control box, make a power cycle of the robot</td></tr>
<tr><td>If the hand is connected to an external power source, make a power cycle of the driver.</td></tr>
<tr><td rowspan="3">2</td><td rowspan="3">The device presents unusual behavior</td><td colspan="2">Run the termination procedure by the digital input six (IN6)</td></tr>
<tr><td colspan="2">Execute any program and wait for its end (the DESTRUCTOR performs the shutdown procedure)</td></tr>
<tr><td colspan="2">Restart the robot specific app</td></tr>
<tr><td>3</td><td>Unusual posture of fingers</td><td colspan="2">Check the glove’s position</td></tr>
</table>

For any other issue, please contact support@qbrobotics.com.

10 Certifications

Standards applied under development of the product is listed in this section. When an EU Directive number is noted in brackets it indicates that the standard is harmonized under that Directive.

ISO 12100:2010
EN ISO 12100:2010 (E) [2006/42/EC]
Safety of machinery – General principles for design – Risk assessment and risk reduction.
The product is evaluated according to the principles of these standards.

ISO 10218-2:2011
EN ISO 10218-2:2011(E) [2006/42/EC]
Robots and robotic devices – Safety requirements for industrial robots Part 2: Robot systems and integration
The product is prepared for compliance with robot system requirements defined in these standards.

ISO/TS 15066:2016
RIA TR R15.606
Robots and robotic devices – Safety requirements for industrial robots – Collaborative operation This is a Technical Specification (TS), **not** a standard. The product is prepared for easy integration in compliance with provisions in this Technical Specification, see more in the safety chapter.

EN ISO13849-1:2015
EN ISO13849-2:2012
Part 1: Safety of machinery. Safety-related parts of control systems. General principles for design.
Part 2: Safety of machinery - Safety-related parts of control systems - Part 2: Validation
The product is evaluated according to these standards.

ISO/TR 20218-1:2018
Robotics – Safety requirements for industry robots Part 1: Industrial robot system end of arm tooling (end-effector)
This is a Technical Report (TR), **not** a standard. The product is designed according to principles in this Technical Report.

ISO 9409-1:2004 [Type 50-4-M6]
Manipulating industrial robots – Mechanical interfaces
The EE flange conforms to type 50-4-M6 of this standard. Robots should also be constructed according to this standard to ensure proper fitting.

EN 60529/A2:2013
Degrees of protection provided by enclosures (IP Code)
This standard defines enclosure ratings regarding protection against dust and water. SoftHand Industry is designed and classified with an IP rating according to this standard.

EN 61000-6-2:2005 [2014/30/UE]
Electromagnetic compatibility (EMC).
Part 6-2: Generic standards - Immunity for industrial environments.

EN 61000-6-4:2007/A1:2011
Electromagnetic compatibility (EMC).
Part 6-4: Generic standards – Emissions for industrial environment.