qb robotics

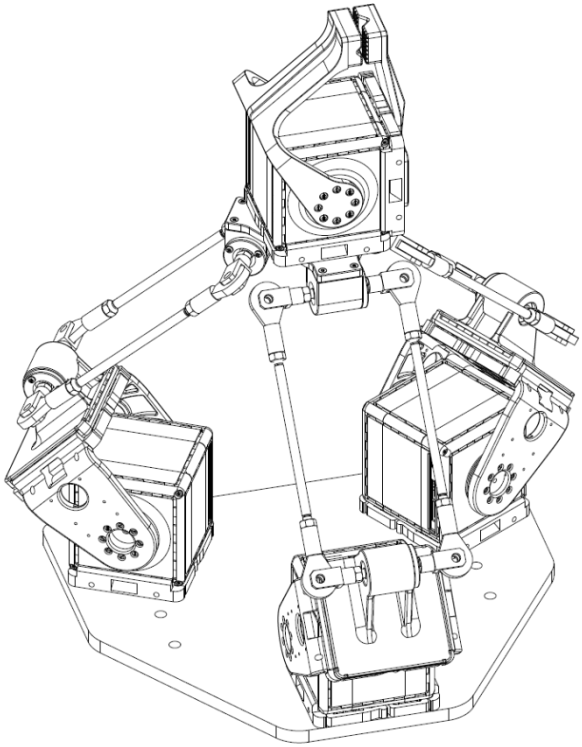

qbDELTA

User manual

Please read these instructions before use.
Do not discard: keep for future reference.

This page was intentionally left blank

qbrobotics

Dear customer

Thank you for purchasing our product. To receive more complete service, please visit our website www.qbrobotics.com

Designed to be controlled like conventional servomotors, the qbmove can be changed in position and stiffness and so it can substitute small conventional servomotors used for constructing any mechanism or robotic system.
The qbmove advanced is the first affordable, muscle-like building block for constructing soft robots. An actuator that is small and lightweight, the qbmove is unique in its ability to endow robots with natural motion, i.e. that resembles the elegance and deftness of human motion, a radical contrast to the traditional rigid and mechanical motion of robots built with common servo-mechanisms.
The qbmove can tuned to be soft or rigid, depending on the task at hand. If the robot needs to guarantee safety during impact, the actuator can be set to be soft. While if precision is the greater need, the actuator can be set to be more rigid. Optimizing energy or speed performance can be achieved by alternating between soft and rigid settings. These combinations can be applied to tasks that are very complex, e.g. grasping or throwing objects, hammering, drawing, and so on.

The product before being packed has been tested with care.

Release 3.2 19/10/2018

Summary

1 About this document

This documentation serves for safety-relevant operations on and with the servo-actuators. It contains safety instructions which must be observed.

The user should assume all responsibility for any accident caused by their careless handling of the product. Attention must be paid to the following safety instructions.
Please read through this user's guide and make sure you fully understand all the instructions before assembling and operating this product.

The examples and diagrams in this manual are included solely for illustrative purpose. Because of the many variables and requirements associated with any installation, qbrobotics s.r.l. cannot assume responsibility or liability for actual use based on the examples and diagrams.

No patent liability is assumed by qbrobotics s.r.l. with respect to use of information, circuits, equipment, or software described in this manual.

1.1 Using this document

The documentation must always be complete and in a perfectly readable state.

Keep the document accessible to the operating and, if necessary, maintenance personnel at all times.

Pass the document to any subsequent owner or user of the product.

1.2 Symbols and designations

⚠	**WARNING**: identifies information about practice or circumstances that can lead to personal injury. Attentions help you identify a hazard, avoid a hazard, and recognize the consequence.
IMPORTANT	Identifies information that is critical for successful application and understanding of the product.

2 Safety

2.1 Safety instructions

IMPORTANT SAFETY INSTRUCTIONS – Read Before Using!

- Operational, maintenance, and service requirements are covered in the instruction manual. Read the entire instruction manual before device use.
- Check that all the contents is intact after removing it from the packaging.
- Keep away from children and pets. Always set off or unplug when not in use.
- Never use aerosol products, petroleum-based lubricants or other flammable products on or near the actuators.
- Do not use any damaged power cable, plug, or loose outlet. It may cause fire or damage to people.
- Do not use if damaged or defective. Do not disassemble the actuators.
- Do not insert any objects between moving parts.
- Do not place your face too close to the robot.
- Disconnect the power supply before cleaning or maintenance.
- Disrespect of these precautions can affect safety of the device.

2.2 Environmental conditions

- Select the installation location so that clean dry air is available for cooling the motor and has unobstructed access to flow around the drive.
- Do not keep or operate the actuators in a place of high temperature or humidity.
- Select a supply voltage that is within the defined tolerance range.
- This product is not waterproof. Never operate the product in a wet place.
- For indoor use only.

2.3 EC Directives on product safety

- The following EC directives on product safety must be observed.
- If the product is being used outside the UE, international, national and regional directives must be also observed.

Machinery Directive (2006/42/EC)
Because of their small size, no serious threats to life or physical condition can normally be expected from electric miniature drivers. Therefore, the Machinery Directive does not apply to our products. The products described here are not “incomplete machines”, so installation instructions are not normally issued by qbrobotics.

Low Voltage Directive (2014/35/EU)
The Low Voltage Directive applies for all electrical equipment with a nominal voltage of 75 to 1500 V DC and 50 to 1000 V AC. The products described in this device manual do not fall within the scope of this directive, since they are intended for lower voltages.

3 Introduction to qbmove Delta

This chapter shows what the qbmove Delta includes, all the technical information about the robot and its mechanical connections.

3.1 What's in the box?

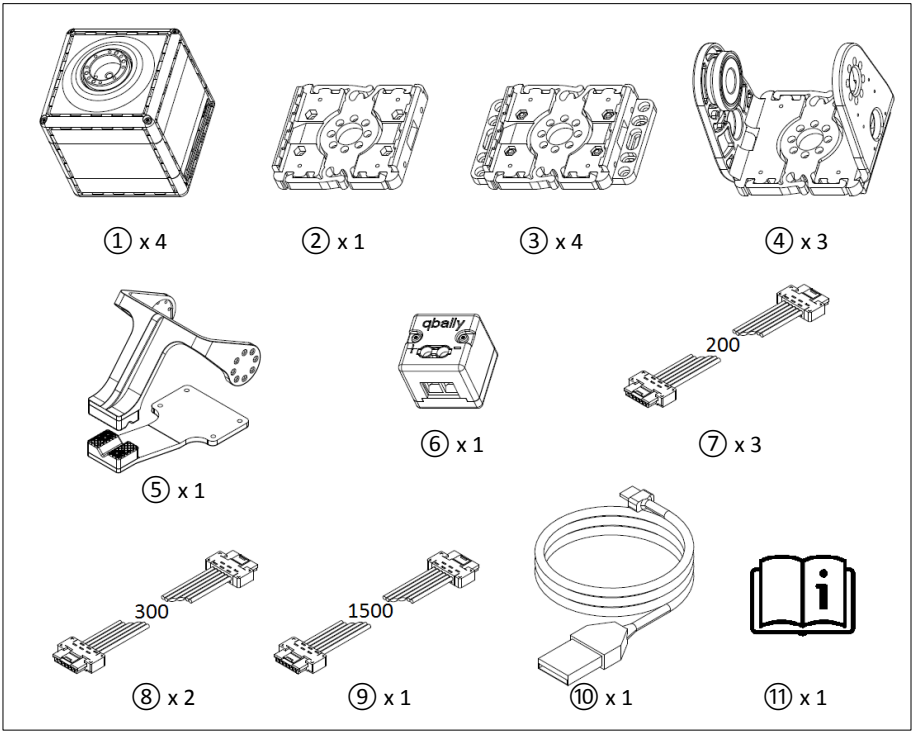

Figure 3-1 ① qbmove Advanced; ② Flat Flange; ③ Base Flange; ④ C-Flange; ⑤ qbgripper; ⑥ qbally; ⑦ ERNI cable 200mm; ⑧ ERNI cable 300mm; ⑨ ERNI cable 1500mm; ⑩ USB cable; ⑪ User manual.

Screws and nuts are provided with each kind of flange:

- Flat Flange: n°8 screws M2x8 ISO1207; n°4 nuts M3 ISO4032 A2; n°4 screws M3x8 ISO4762;
- Base Flange: n°8 screws M2x8 ISO1207; n°4 nuts M3 ISO4032 A2; n°3 screws M3x10 ISO10642;
- C-Flange: n°16 screws M2x8 ISO1207;

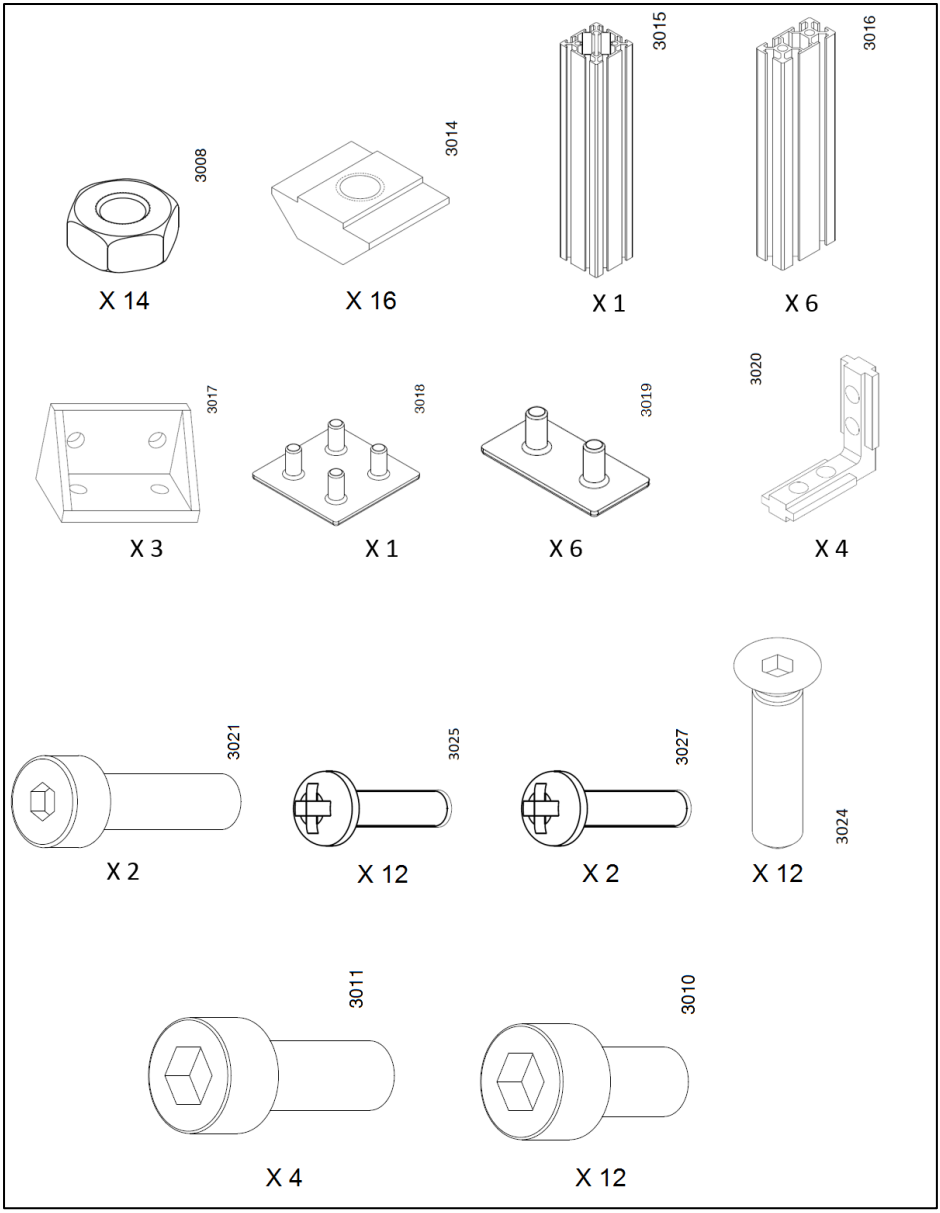
3008
X 14
3014
X 16
3015
X 1
3016
X 6
3017
X 3
3018
X 1
3019
X 6
3020
X 4
3021
X 2
3025
X 12
3027
X 2
3024
X 12
3011
X 4
3010
X 12

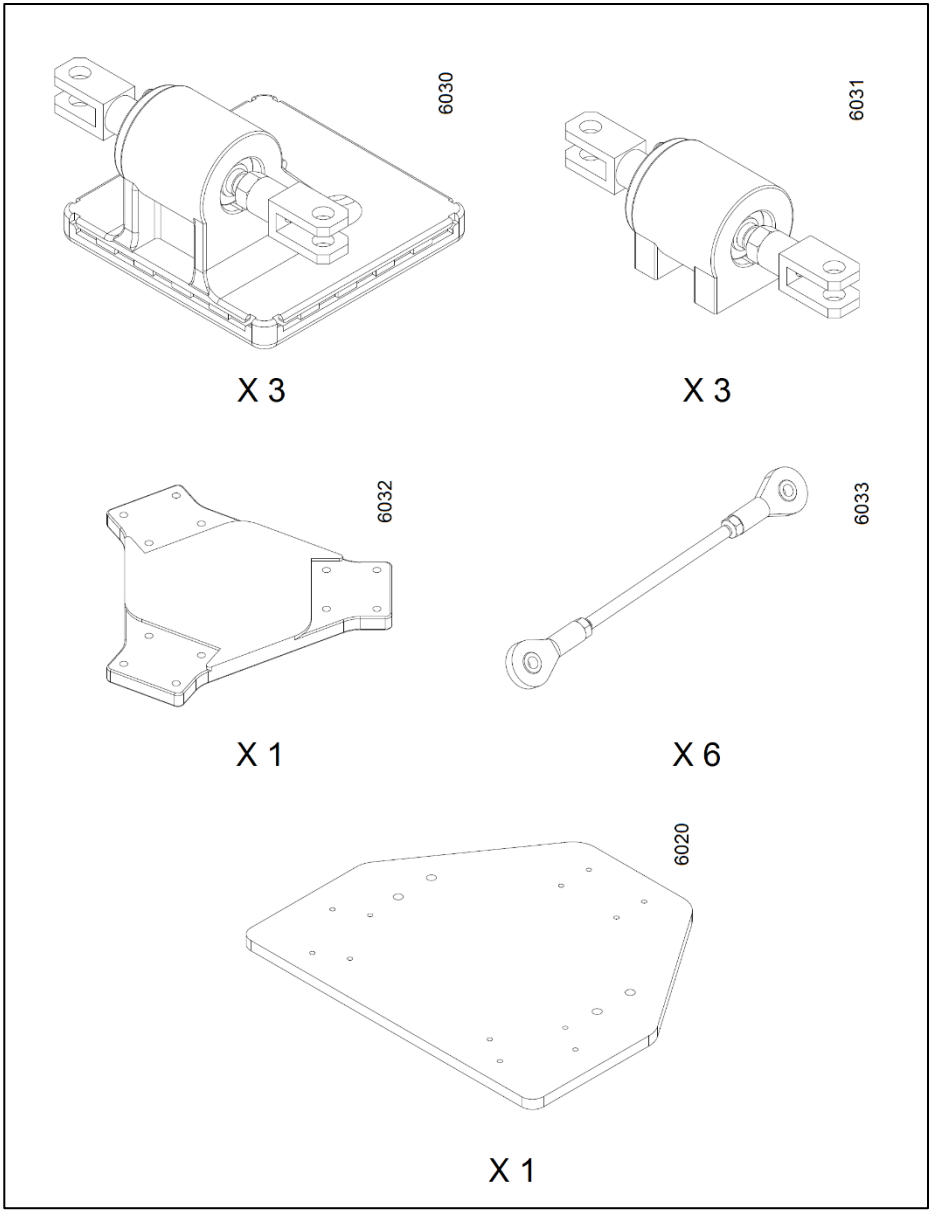

Provided ISO components:

Assembly code	Description	Unified code
3008	Nut M3	UNI 5588 – DIN 934 (PG)
3010	Screw M6x12	ISO 4762 – UNI 5931
3011	Screw M6x16	ISO 4762 – UNI 5931
3021	Screw M6x8	ISO 4762 – UNI 5931
3024	Screw M3x12 SV	UNI 5933 – DIN 7991 A
3026	Screw KA22x8	
3027	Screw KA30x8	

Table 3-1 ISO components.

3.2 Technical data

Mechanical and electrical characteristics of the qbmove Advanced:

Figure 3-2 qbmove Advanced. ① output shaft; ②daisy-chain RS485; ③ USB port.

operating data			
(quantity)		(unit)	(value)
mechanical			
Continuous Output Power		[W]	33
Nominal Torque		[Nm]	5,5
Nominal Speed		[rad/s]	5,5
Peak Torque		[Nm]	6,8
Maximum Speed		[rad/s]	6,33
Maximum Stiffness		[Nm/rad]	83,5
Minimum Stiffness		[Nm/rad]	0,5
Nominal Stiffness Variation Time	no load	[s]	0,25
	max torque	[s]	0,25
Maximum Elastic Energy		[J]	0,88
Maximum Hysteresis		[°]	5
Maximum Deflection	Max stiffness	[°]	6
	Min stiffness	[°]	50
Active Rotation Angle		[°]	±180
Angular Resolution		[°]	360/32768
Weight		[kg]	0,45
electrical			
Voltage Supply		[V]	24
Nominal Current		[A]	1,8
Maximum Current		[A]	3
Starting Current		[A]	13
control data			
Nominal current (USB)		[A]	0,26
Electrical protocol		RS485/USB	-

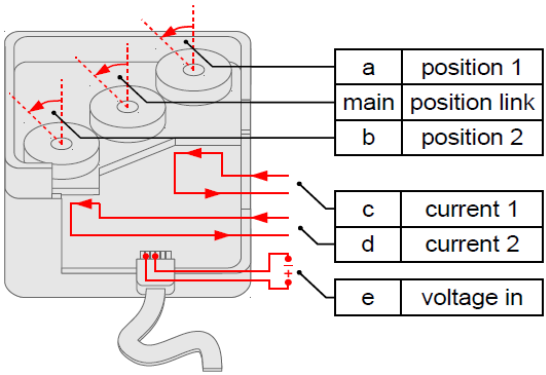

Figure 3-3 Sensors references.

operating data		
(quantity)	(unit)	(value)
Sensor a – Motor 1 Position		
Resolution	[°]	360/32768
Range	[°]	0-360
Sensor b – Motor 2 Position		
Resolution	[°]	360/32768
Range	[°]	0-360
Sensor c – Motor 1 Current		
Resolution	[A]	5/1638
Range	[A]	5
Sensor d – Motor 2 Current		
Resolution	[A]	5/1638
Range	[A]	5
Sensor e – Input Voltage		
Resolution	[V]	25/1638
Range	[V]	0-25

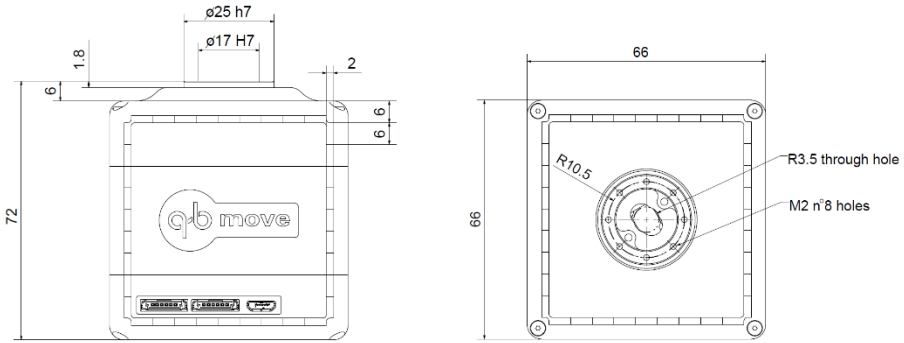

Figure 3-4 qbmove Advanced dimensions.

The qbmove is a back drivable actuator. When the robot is off, a sufficiently high external load can move the output shaft.

Do not use the Peak torque more than few seconds.

Dimensions of the flanges.

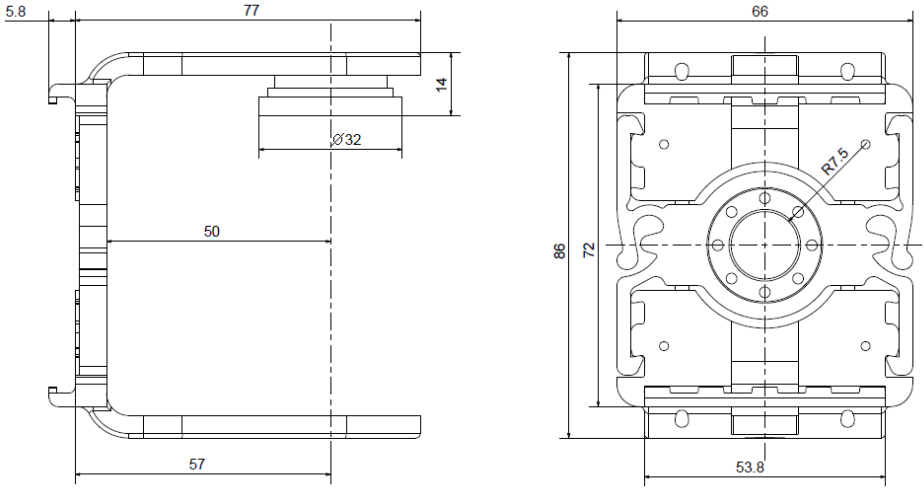

Figure 3-5 C-Flange dimensions.

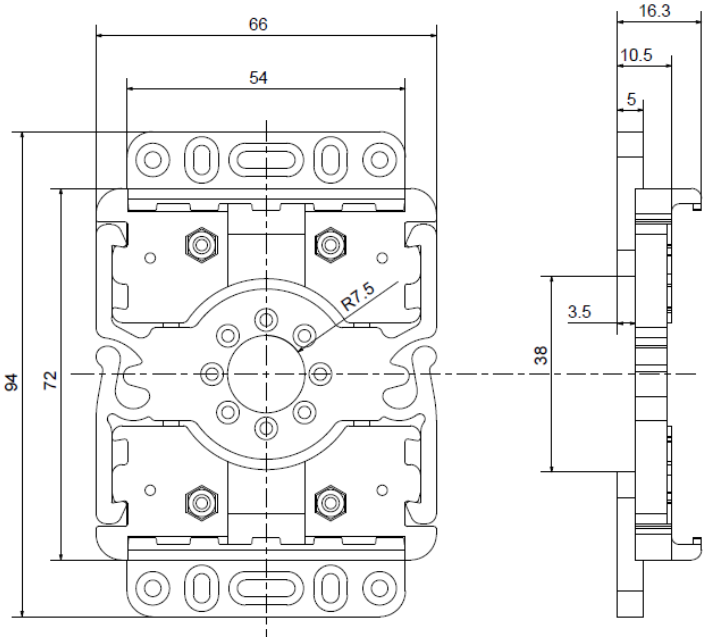

Figure 3-6 Base flange dimensions.

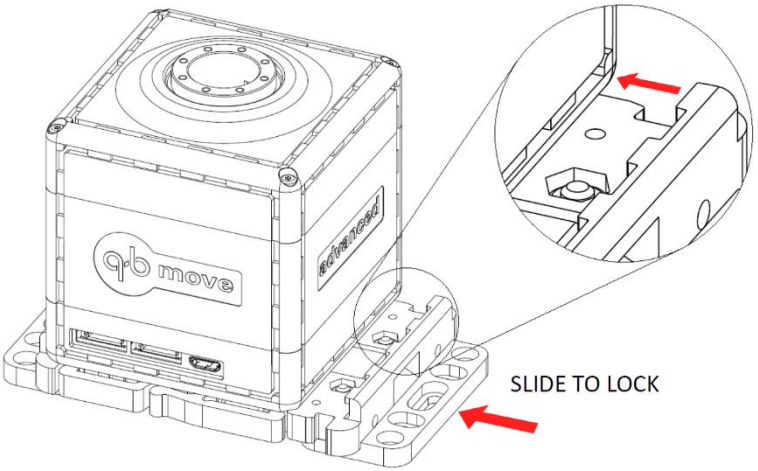

Figure 3-7 Snap-on mechanism.

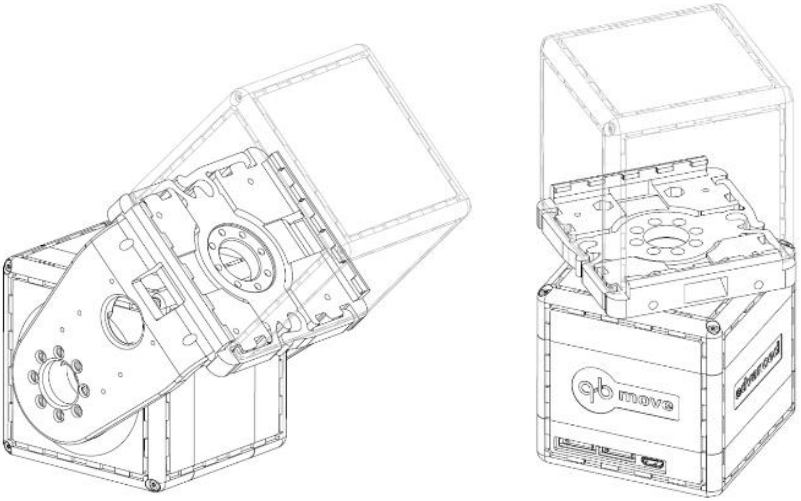

Figure 3-8 Examples of connection.

3.2.1 Agonistic/Antagonistic VSA

The qbmove Advanced embeds the features of a servo motor and, moreover, the possibility of adjusting the output shaft stiffness.
The Figure 3-9 shows a scheme of the agonistic/antagonistic VSA principle, implemented in our actuator. Basically, there are two motors connected at the output shaft by non-linear springs, so the output position "x" and the stiffness "σ" depend on the motors' positions "q_1" and "q_2", on the torque "τ" and on the mathematical model of the system.

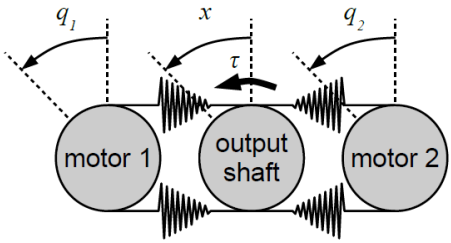

Figure 3-9 Agonist/Antagonistic VSA model.

All these quantities are each other connected, then, to evaluate a proper mathematical model experimental data are needed.
Using a pendulum structure, a sinusoidal movement with different frequencies, and different stiffness presets, the obtained results can be synthetized in the graphic below; where the deflection "δ" is the difference between the angular position of the output shaft and the equilibrium position $\delta = x - (q_1+q_2)/2$ and the quantity $(q_1 - q_2)/2$ is the stiffness preset.

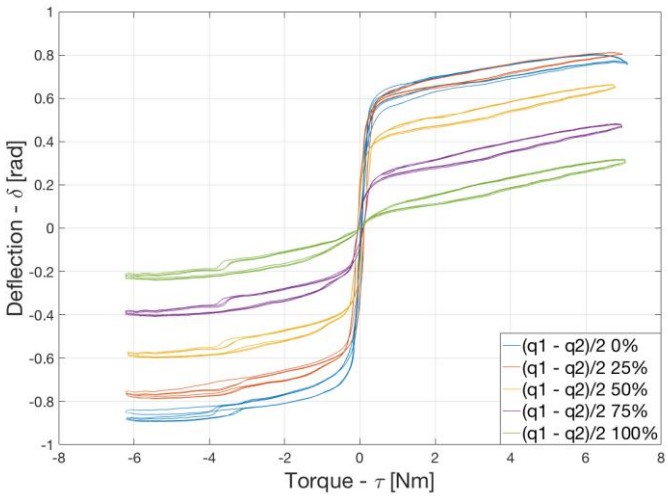

Figure 3-10 Experimental Torque Deflection Characteristic.

Using fitting functions (see the next paragraph) the relations between deflection, torque and stiffness are represented by the following graphics.

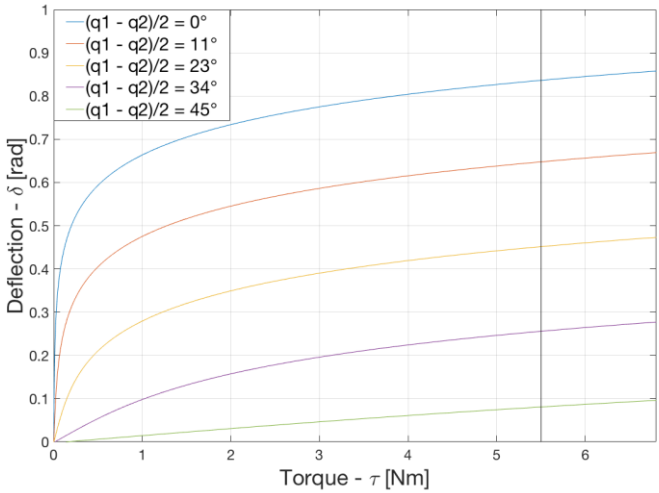

Figure 3-11 Torque - Deflection characteristic.

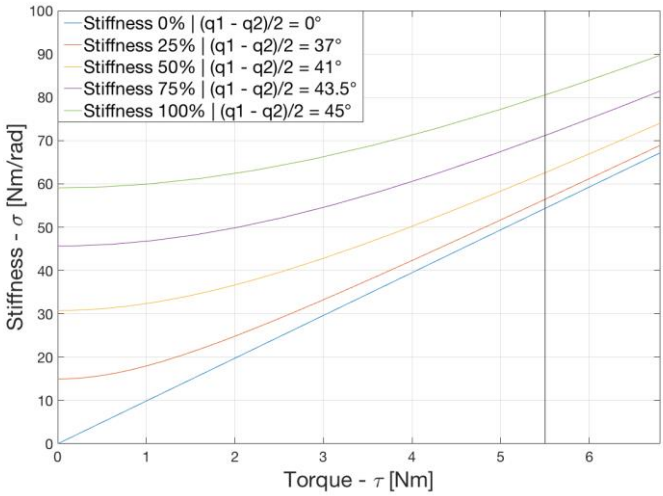

Figure 3-12 Torque - Stiffness characteristic.

Moreover, also considering the motors' speed, our actuator has a 3d workspace. The figures below show the Torque – Speed characteristic (Figure 3-13) and the VSA workspace (Figure 3-14).

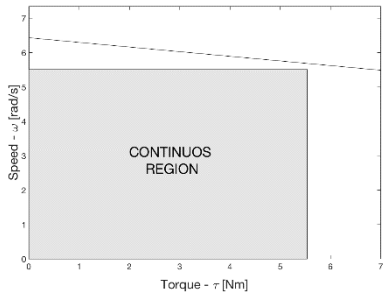

Figure 3-13 Torque - Speed characteristic.

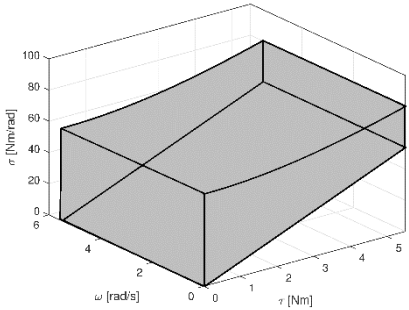

Figure 3-14 Torque - Speed - Stiffness Workspace.

3.2.2 Mathematical model

The following mathematical functions and their parameters describe the mathematical model of our agonistic/antagonistic VSA.

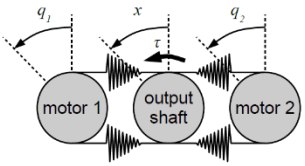

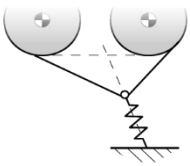

	value	Unit
k_1	0,0026	[Nm]
a_1	8.9995	[1/rad]
k_2	0.0011	[Nm]
a_2	8.9989	[1/rad]

equilibrium point	$\boldsymbol{X_e = \frac{(q_1 + q_2)}{2}}$
output stiffness	$\sigma = a_1 k_1 \cosh(a_1(x - q_1)) + a_2 k_2 \cosh(a_2(x - q_2))$
output torque	$\tau = k_1 \sinh(a_1(x - q_1)) + k_2 \sinh(a_2(x - q_2))$
elastic energy	$H = \frac{k_1(\cosh(a_1(x - q_1)) - 1)}{a_1} + \frac{k_2(\cosh(a_2(x - q_2)) - 1)}{a_2}$

3.3 Electrical connections

In this guide you will find explanation regarding power connection of a single qbmove units as well as qbmove chains. Power connection is made using the qbally components which are currently available in two versions (Figure 3-16 and Figure 3-15).

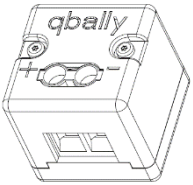

Figure 3-16: qbAlly1

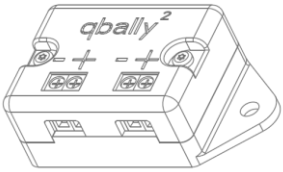

Figure 3-15: qbAlly2 (not included)

The supply voltage must be 24V

3.3.1 Qbally1

The qbally1 is the simplest qbally available. It provides a handily interface between your power supply and the 6 poles ERNI cable used to create daisy chain connection between qbmoves units. With the qbally1 you can power a single qbmove unit (Figure 3-17) or a short chain (up to 5) of qbmoves as shown in Figure 3-18

The qbmove is provided of two LEDs:

- White LED: it indicates that the logic circuit is powered;
- Blue LED: it indicates that the power circuit is powered.

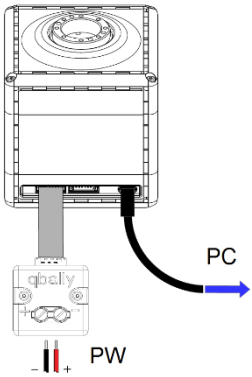

Figure 3-17: Connection to a qbMove

IMPORTANT	If you connect the qbmove to the power supply and the USB cable isn't connected, both LEDs are on. Because to electrically power the power circuit, it also means to power the logic one.

IMPORTANT	Each qbmove you connect to your system **must have a unique ID**.

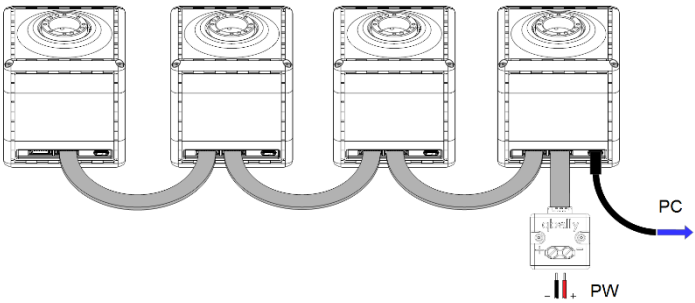

Figure 3-18: Serial connection of four qbmoves using a qbally1

It is advisable not to connect more than four qbmoves for each chain, due to the current capacity of the ERNI cable.

3.3.2 Qbally2 (not included)

The qbally2 (5004) is the first evolution of the qbally1. It allows you to power two qbmoves chain by using separate power supply (e.g. two batteries), and it allows RS485 communication between the two branches, so you will not need to use two USB cables. See Figure 3-19.

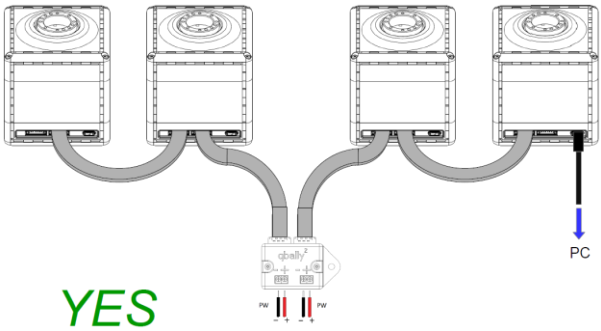

Figure 3-19: Connection of two serial chains of qbmoves using a qbally2

Figure 3-20 and Figure 3-21 show some examples of wrong connections using qbally2 and qbally1.

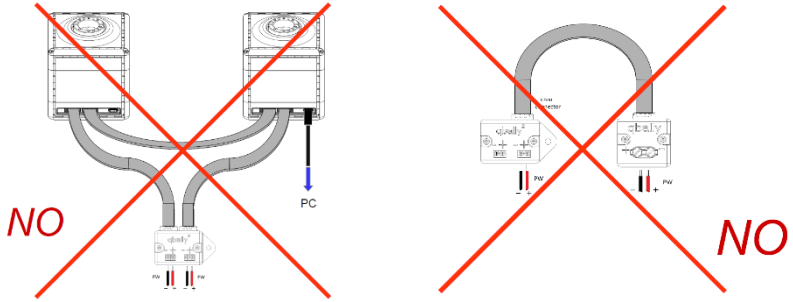

Figure 3-20: Wrong connection examples using qbally2 and qbally1

IMPORTANT Connect USB first and then power supply.

Do not connect more than 5 devices simultaneously at the same power supply.

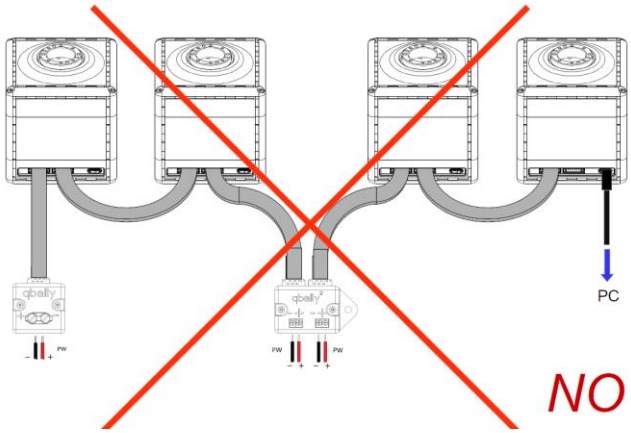

Figure 3-21: Wrong connection examples using qbally2 and qbally1

4 Mechanical assembly

This chapter provides the user with the required procedures needed to assemble different kind of mechanical connection between qbmoves and, furthermore, some technical advice for a correct use of the platform.

Encoding of components for mechanical assembly

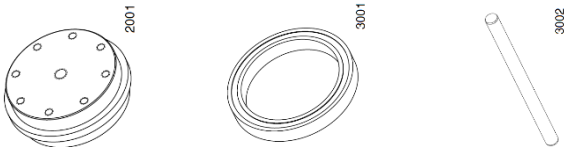

Figure 4-4:Parts from left to right - 2001, 3001, 3002

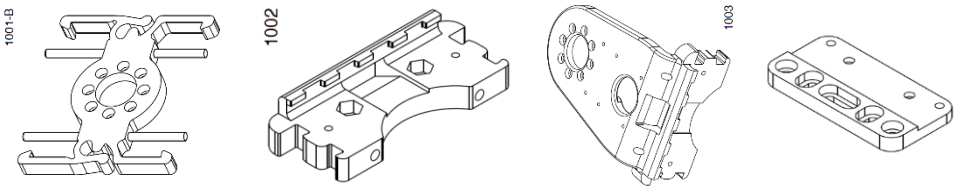

Figure 4-3: Parts from left to right - 1001, 1002, 1003 ,1004

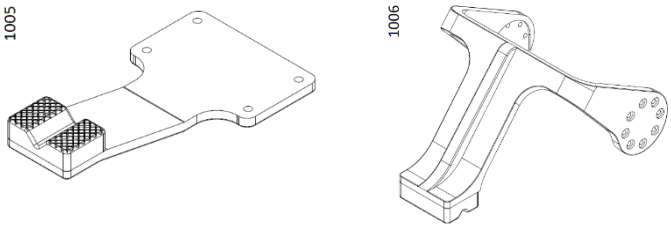

Figure 4-2: Parts from left to right - 1005, 1006

Figure 4-1: Parts from left to right - 3003, 3005, 3007, 3008

Table 4-1: Unified components codes

Assembly code	Description	Unified code
3001	Bearing 25x32x4	MR 6705
3003	Screw M2x8	ISO 1207 – UNI 6107
3005	Screw M3x8	ISO 4762 – UNI 5931
3007	Screw M3x10 SV	ISO 10642
3008	Nut M3	UNI 5588 – DIN 934 (PG)

Required tools for the assembly are listed below.

- Flathead screwdriver
- 2 mm Allen wrench
- 2.5 mm Allen wrench

4.1 Flat Flange assembly

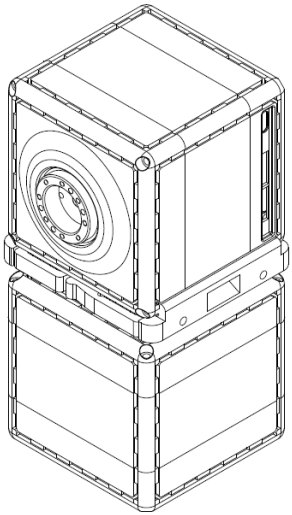

Figure 4-5: Two qbMoves connected using a flat flange

Required components:

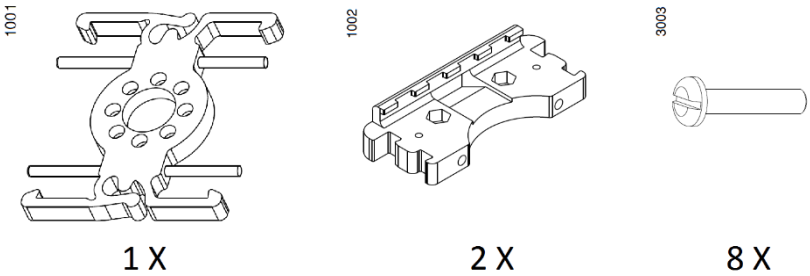

Figure 4-6: Required components for a flat flange

4.1.1 Assembly sequence

Use of the CORE component.

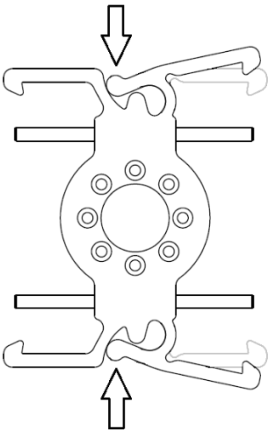

Figure 4-8: Anchors Opening

In Figure 4-8 arrows represent points to push in order to open the locking mechanism.

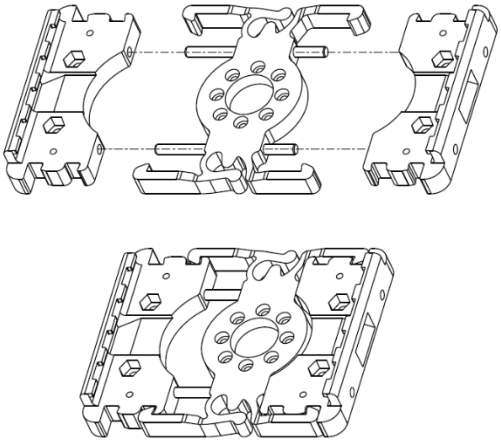

Figure 4-7: Flat Flange

Assemble the 1002 parts with the 1001 central core, using the two pins as reference.
Make sure to the orientation of the two components is the same and with the anchor teeth on the same side of the counterbores of the central component.

Assemble the Flat flange on the output pulley of the qbmove, by the eight screws 3003, as shown in Figure 4-9.

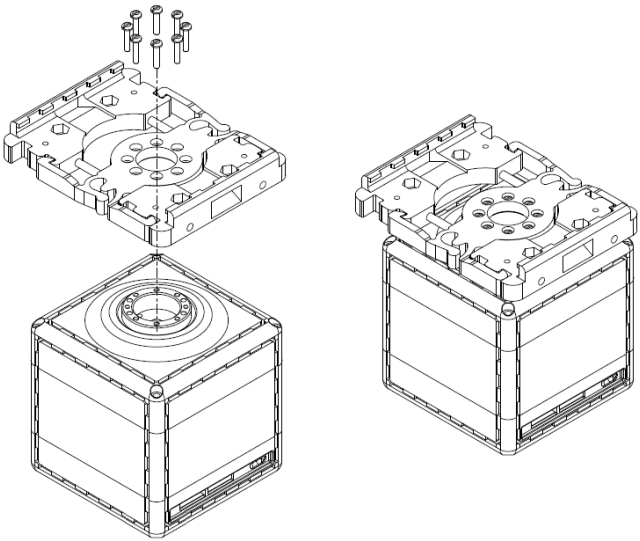

Figure 4-9: Flat Flange assembly procedure on a qbMove

Now a second qbmove can be connected to the first one by snapping the flanges, as shown in Figure 4-10.

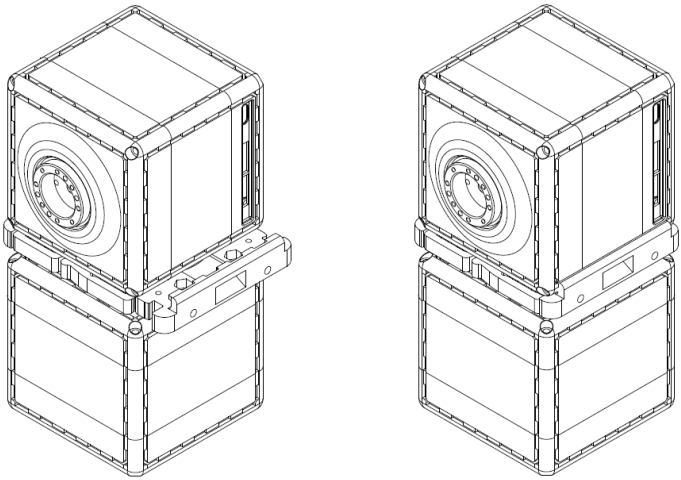

Figure 4-10: Two qbMoves connected with a flat flange

4.1.2 ERNI cable routing in the Flat Flange

The ERNI cable, which allows the connection of 2 qbmoves, can be placed inside the flat flange in two ways; First one is shown in Figure 4-11.

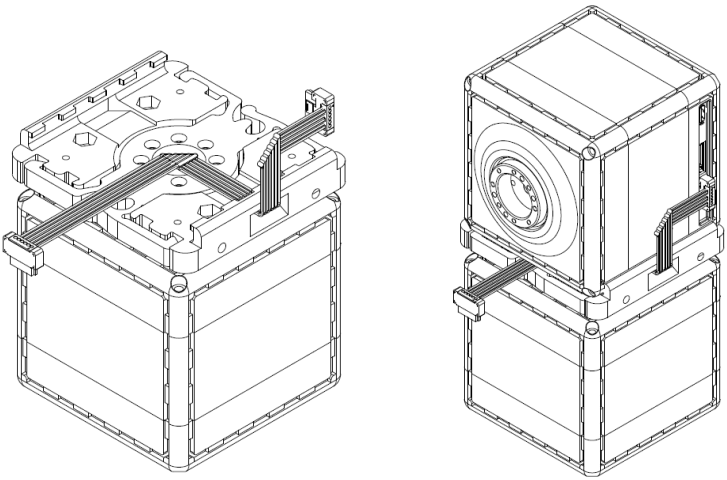

Figure 4-11: First possible ERNI cable routing inside a flat flange

Another way is shown in Figure 4-12.

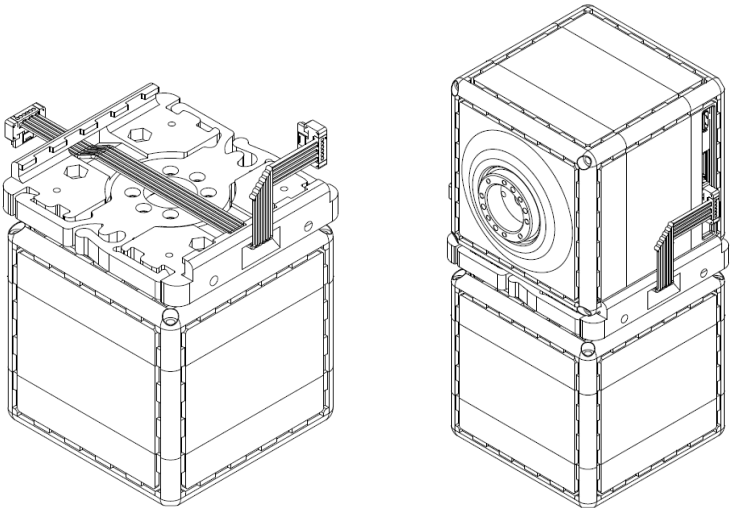

Figure 4-12: Second possible ERNI cable routing inside a flat flange

4.2 Base Flange assembly

This type of flange is used to connect one qbmove to your desired frame.

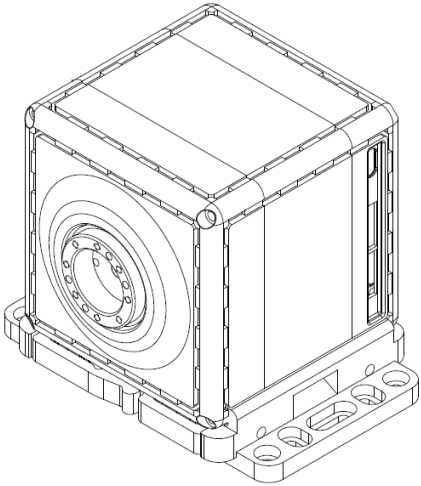

Figure 4-13: qbMove connected to a Base Flange

Required components:

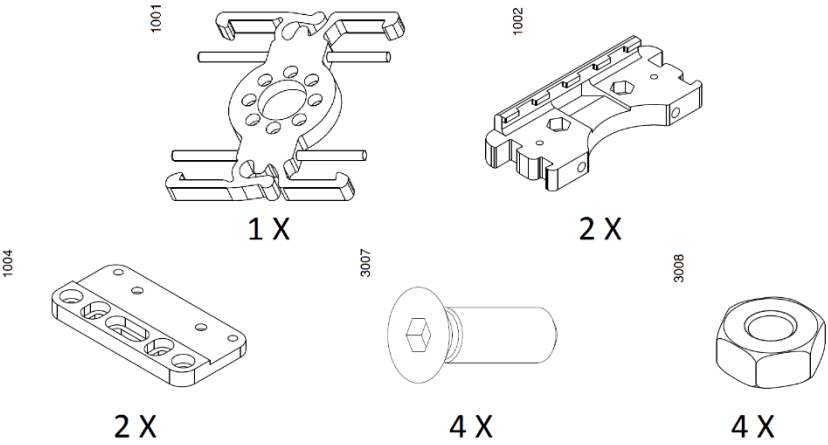

Figure 4-14: Required components for a Base Flange

4.2.1 Assembly sequence

Preparation of the Base Flange
Assemble the 1002 parts with the 1004 parts using two 3007 screws and two 3008 nuts, as shown in Figure 4-15.

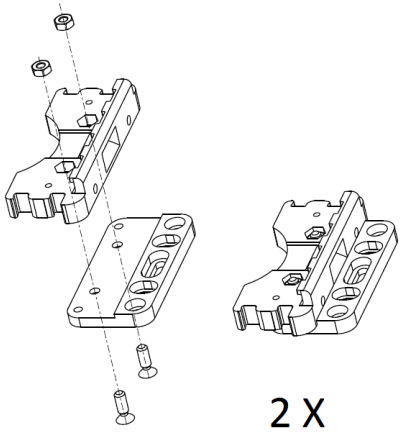

Figure 4-15: Add-on assembly procedure

Assembly of the Base Flange

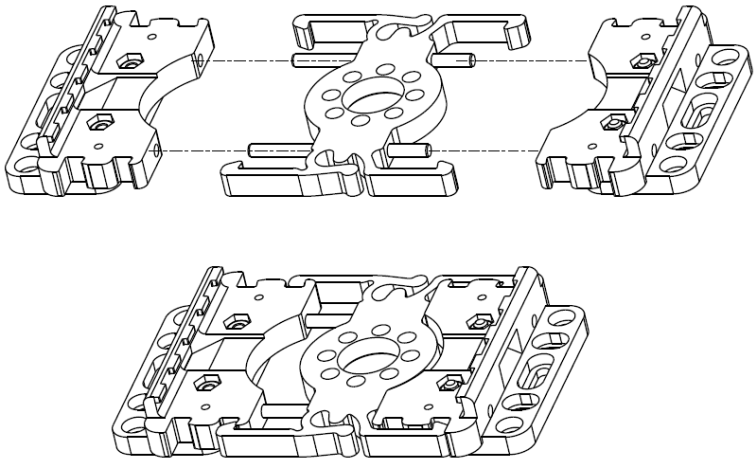

Figure 4-16: Base Flange

Assemble the two parts obtained with the 1001 central core, using the two pins as references. Make sure to the orientation of the two components is the same and with the anchor teeth on the same side of the counterbores of the central component.

Place the removable component from the side of the elastic anchors of the Core in correspondence of the first notches, as shown in Figure 4-16

Snap the Base flange on one of the free faces of the qbmove (Figure 4-18) then, using the provided holes, screw the entire assembly wherever you need.

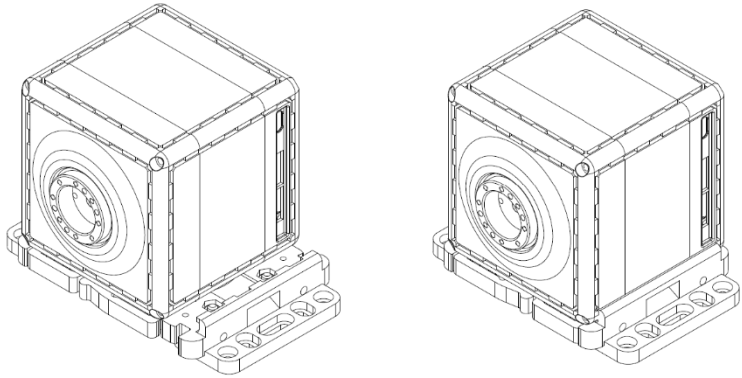

Figure 4-18: Base Flange connected to a qbMove

4.3 C Flange assembly

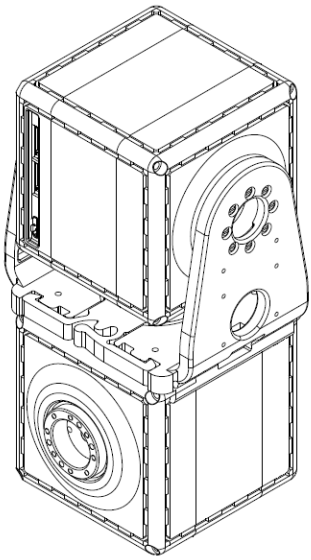

Figure 4-17: qbMoves connected by a C-Flange

Required components:

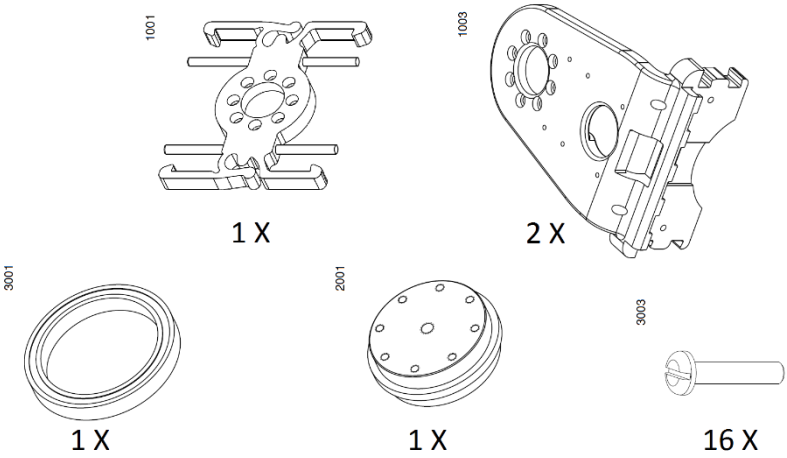

Figure 4-19: Required components for a C-Flange

4.3.1 Assembly sequence

Preparation of a C Flange

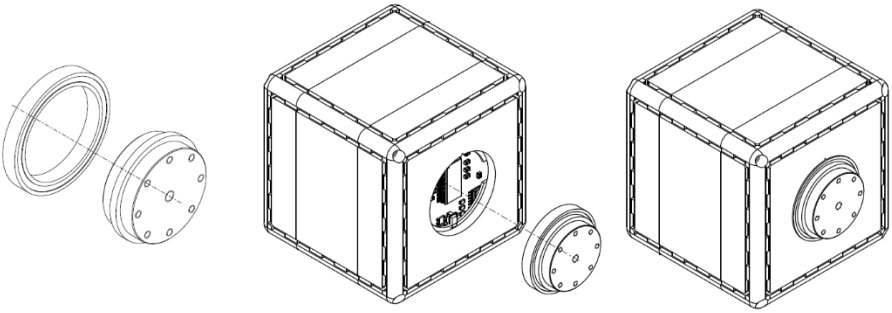

Figure 4-20: Free pulley on qbMove assembly procedure

Assemble the 3001 bearing on the free 2001 pulley, on the opposite side of the eight treaded holes. Assemble the obtained component with the qbmove, to reveal the spot, remove the plastic bottom cap with a little flathead screwdriver.

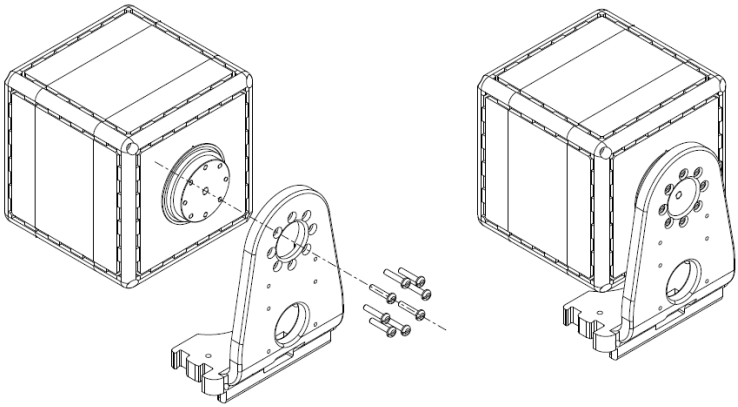

Figure 4-21: First flange wing assembly procedure

Assemble the 1003 component on the free pulley by using eight 3003 screws. Assemble the component obtained before and the second 1003 component with the Core, using the two pins as reference.

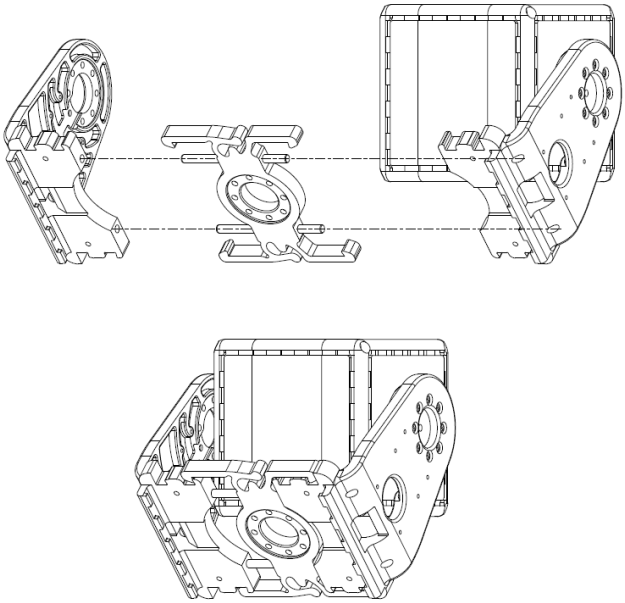

Figure 4-22: C-Flange assembly procedure

Place the removable 1003 component in correspondence of the first notches, as shown in Figure 4-22. Assembly of the C Flange with the QB-move

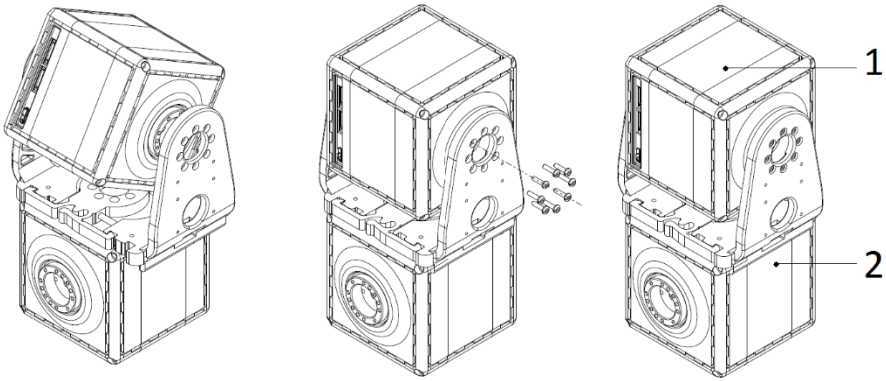

Figure 4-23: qbMove C-Flange assembly procedure

Place the qbmove ② in the desired position and then close the C Flange.

Move the qbmove ① in the desired “zero” position and then fix it with the eight 3003 screws. NOTE: with the two flanges screwed to the qbmove ① it is still possible to open the flange to detach or change the orientation of the qbmove ②.

4.3.2 ERNI cable routing in the C Flange

The ERNI cable can be routed inside the C Flange as shown in Figure 4-24.

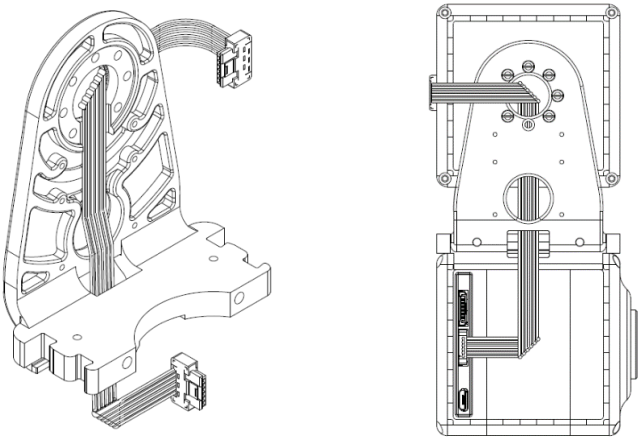

Figure 4-24: ERNI cable routing inside the C-Flange

4.4 Double Flat Flange assembly

This type of flange is used to rigidly connect two qbmoves.

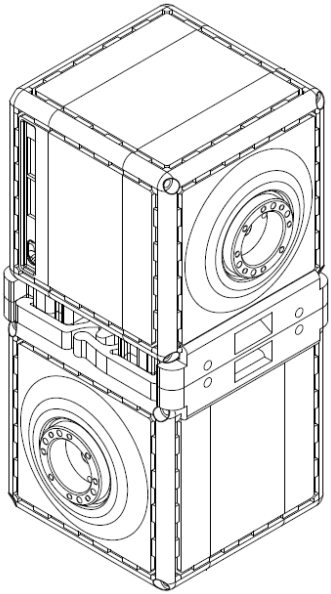

Figure 4-25: qbMoves connected by a Double Flat Flange

Required components:

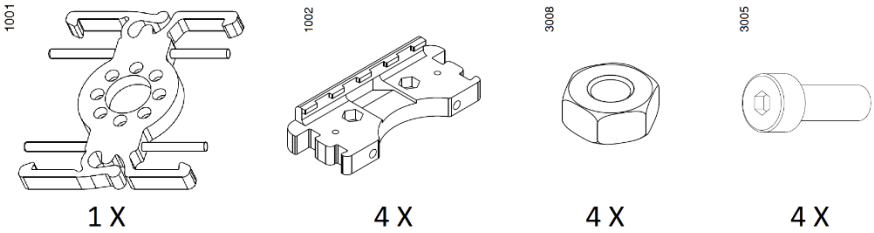

Figure 4-26: Required components to assemble a double flat flange

4.4.1 Assembly sequence

Preparation of the Double Flat Flange.

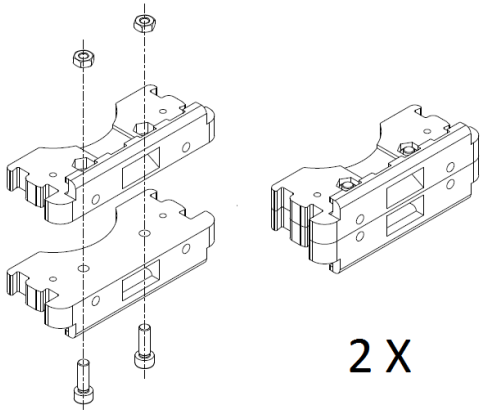

Figure 4-27: Removable component

Join two 1002 components and fix each other with two 3005 screws and two 3006 nuts, as shown in Figure 4-27.
The obtained components will be the removable elements of the Double Flat Flange.

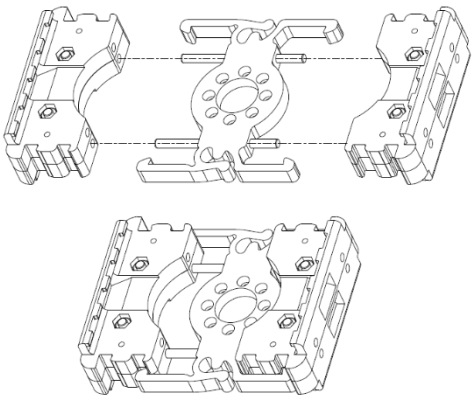

Figure 4-28: Double flat flange

Assemble the two obtained components with the Core, using the two pins as reference.
Place the removable component in correspondence of the first notches of the flanges, as shown in Figure 4-28.

Assembly the Double flat flange with the qbmove.
With the double flat flange, you can rigidly connect two qbmove with different orientation. An example is shown in Figure 4-29.

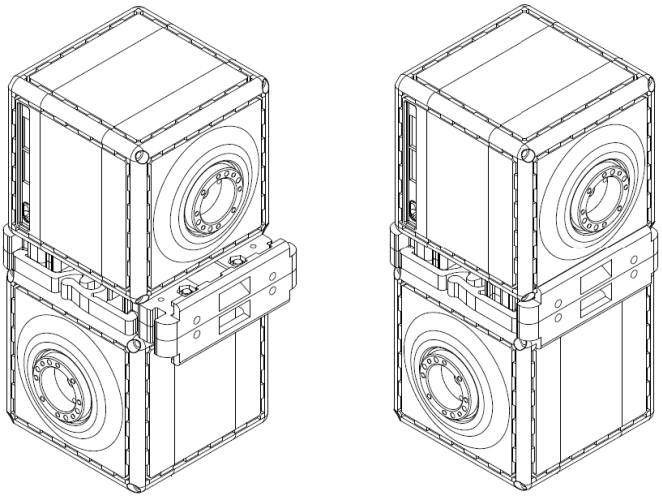

Figure 4-29: qbMove double flat flange assembly

4.5 Gripper assembly

Required items.

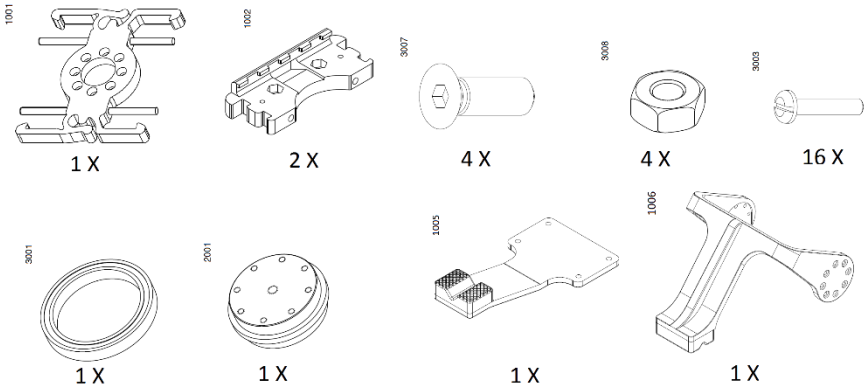

Figure 4-31: Required components for a qbMove gripper

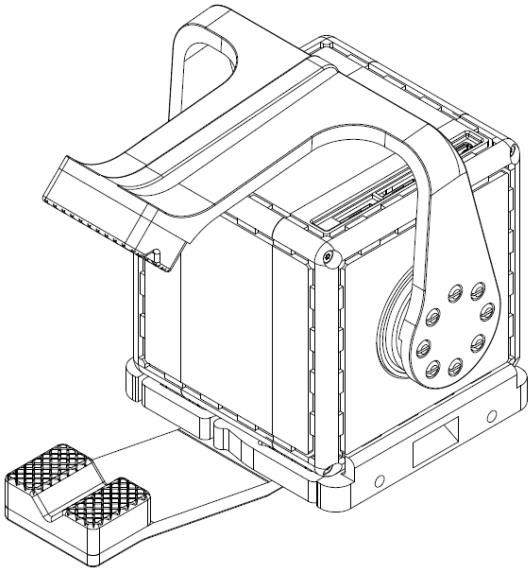

Figure 4-30: qbMove gripper

4.5.1 Assembly sequence

Assemble the 1005 component on a *Flat Flange* using four 3008 nuts and two 3007 screws, as shown in figure below.

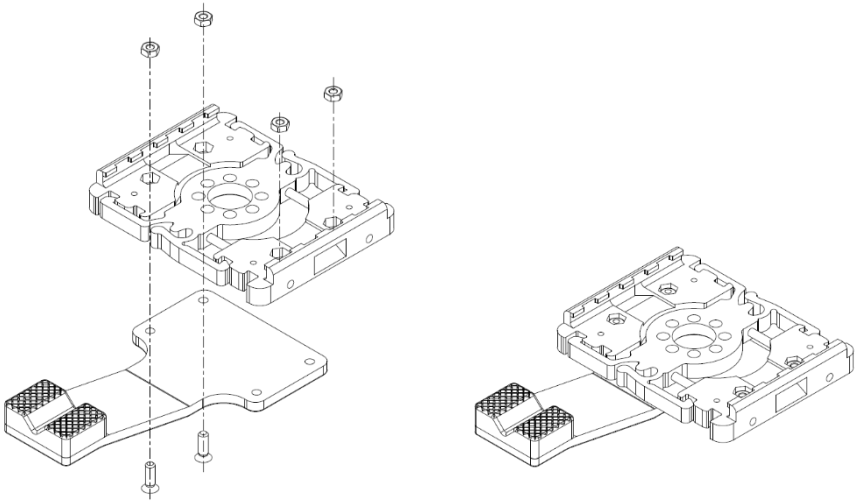

Figure 4-32: Fixed finger assembly procedure

Assemble the fixed finger on the qbmove closing the *Flat Flange* and locking it by two 3007 screws, as shown in Figure 5-7. Make sure to orient the qbmove as shown, in order to have the electrical connectors as indicated.

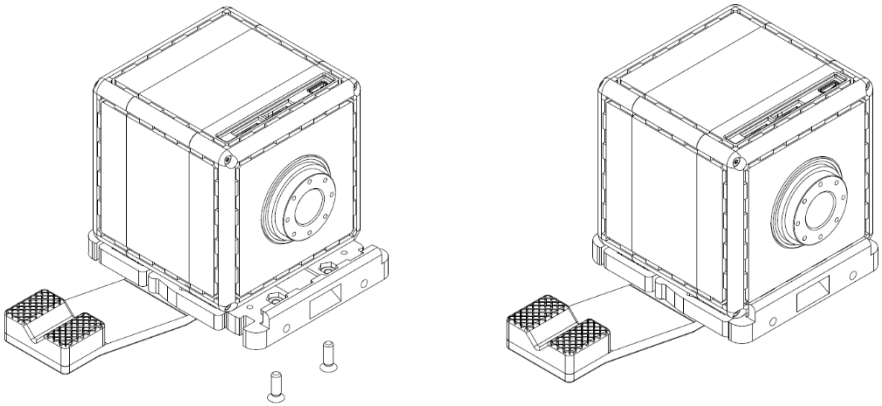

Figure 4-33: Fixed finger qbmove assembly procedure

Assemble the second finger, component 1006, using the 3003 screws, as shown in Figure 5-8. The qbmove must be equipped with a rear pulley, as like in a *C Flange* mounting.

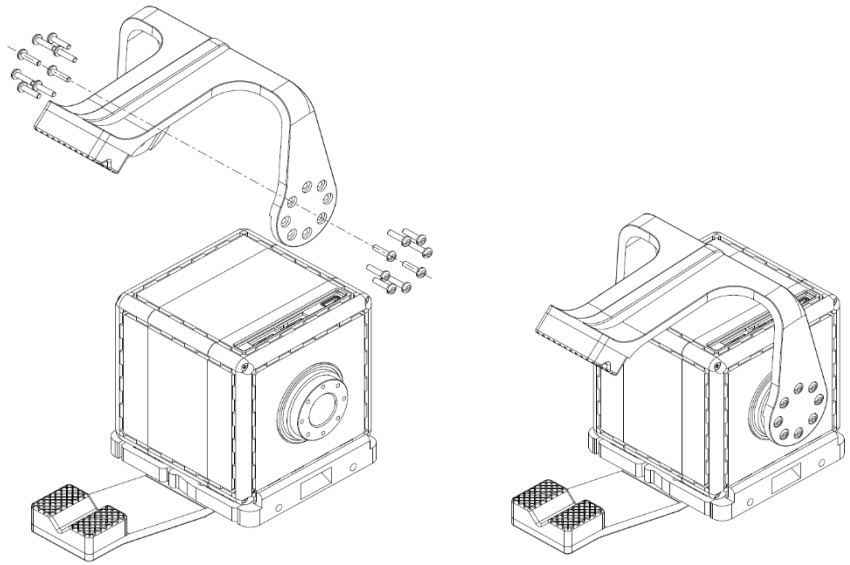

Figure 4-34: Assembled gripper

4.6 Tool tips

In this paragraph, you can find some basic advices to correctly assemble a robot using the qbmove kit, avoiding unwanted behaviors of the assembled robot and let the user using it safely. For a smart assembly, you must read with attention the chapter 2, primarily the technical data.

The qbmove is a back drivable actuator. When the robot is off, a sufficiently high external load can move the output shaft.

4.6.1 Payload evaluation and assembly examples

The payload of the assembled robot will depend on the actuator's torque, on the masses, on the distances and accelerations.

Before starting the assembly, you must decide which type of robot you want to build and make proper mechanical considerations about the workspace, the dynamics and the payload. A wrong assembly can drastically reduce the robot's payload when near the limits of the workspace. Instead, a different kinematic can help lifting of higher loads.

Figure 4-35 shows some schematic examples of assembly. Usually the axis of the first joint is vertically placed to circularly explore the workspace of your robot, then the other actuators can be assembled in different ways.

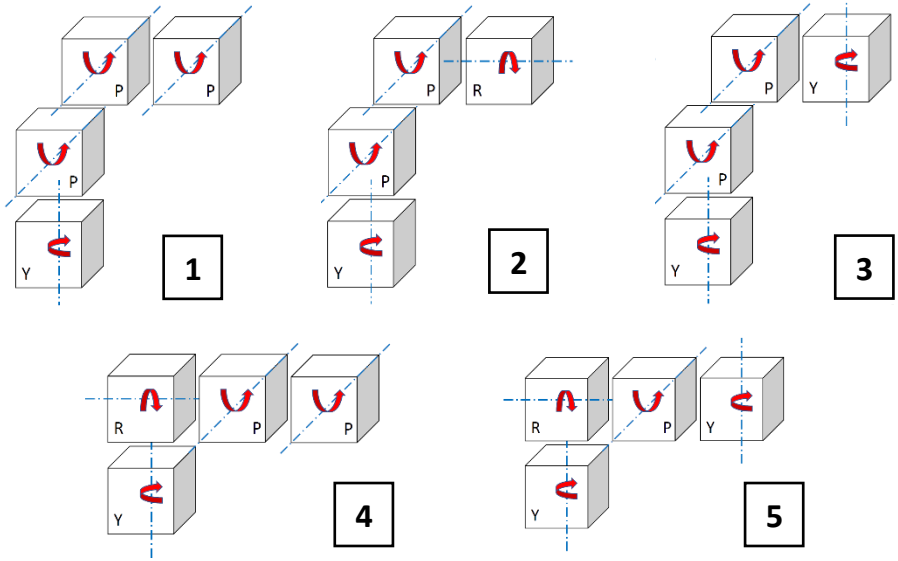

Figure 4-35: Different types of assembly examples

Using the flanges in the kit, you can make the joints of you robot. For example: Base Flange to fix the first qbmove to a frame; Flat Flange for first and fourth joint of ② and second for ④ and ⑤; and C Flange for other joints.

IMPORTANT Before assembly, make a correct evaluation of the joint's torque based on the technical data and external loads.

Each qbmove you connect to your system **must have a unique ID**.

4.6.2 Distances between flange and actuator

When you assemble any robot, you must be careful about the distances between flanges and actuator's carter (**Errore. L'origine riferimento non è stata trovata.**) because during the use, cables or some object can make interference with relative movement of the components.

To avoid malfunctions after assembly, you must manually check the movement of each joint to verify if they work properly.

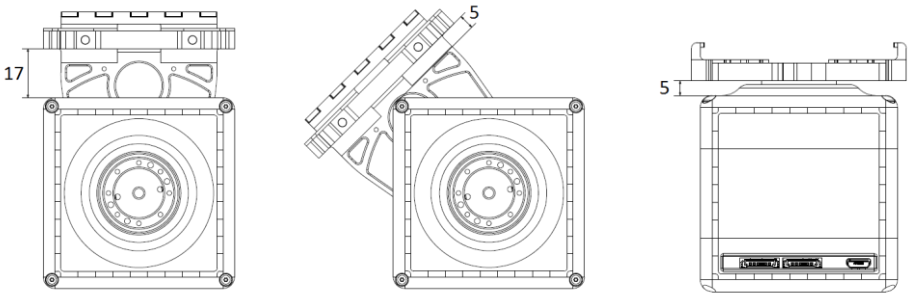

Figure 4-36: Critical distances between qbmove's carter and C-Flange (first two images) and Flat Flange (last picture on the right)

IMPORTANT Before using the robot, you must check if each joint's range is free of obstacles.

5 Mechanical assembly of qbdelta

This chapter shows how to assembly the qb Delta robot.

Required tools for the assembly are listed below.

- Flathead screwdriver
- Torx wrench T6
- Torx wrench T10
- 2 mm Allen wrench
- 2.5 mm Allen wrench
- 5 mm Allen wrench

Before starting the assembly of your QB Delta, remove each part from its bag and protection for a prior inspection. If you find any damage or missing parts, contact the supplier. It is advisable to consult the guide for the assembly of the several kinds of flanges and obtain the required tools.
You can find the useful guides in http://www.qbrobotics.com

5.1 Assembly of the Base

Put four nuts 3008 in a Flat Flange, then assembly the qbmove Advanced (Figure 5-1).

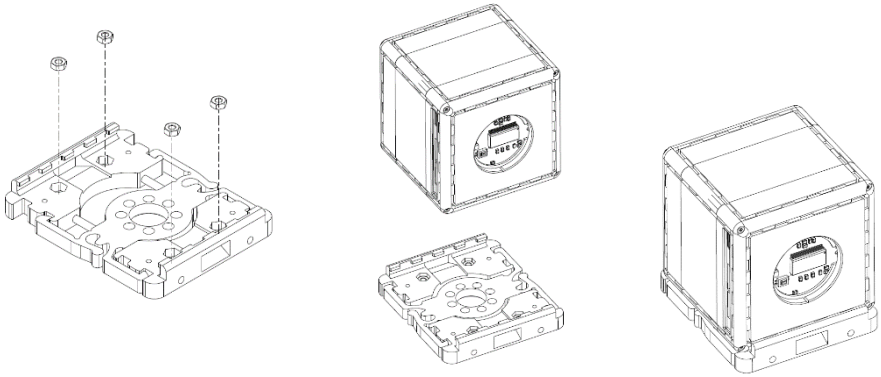

Figure 5-1 Flat flange assembly.

Repeat the procedure for three actuators, being carefully to their orientation with the flange. Assembly the actuators on the plate 6020 by four screws 3024 (Figure 5-2).

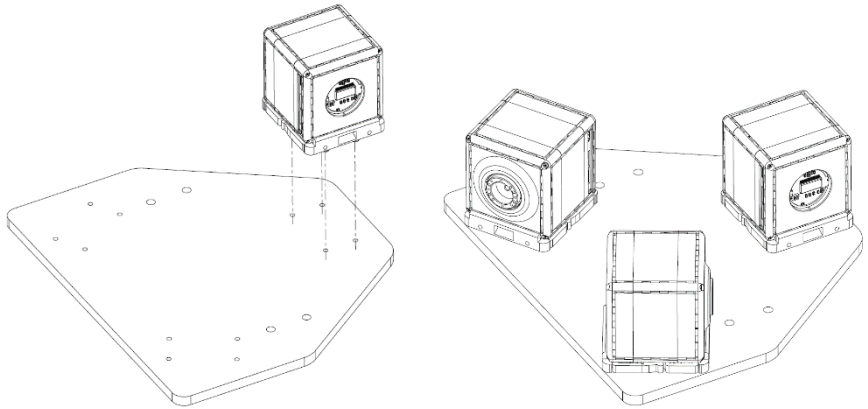

Figure 5-2 Assembly of the actuators on the plate 6020.

Assembly the QB Delta robot on two connected profiles using 4 nuts 3014 and 4 screws 3010.

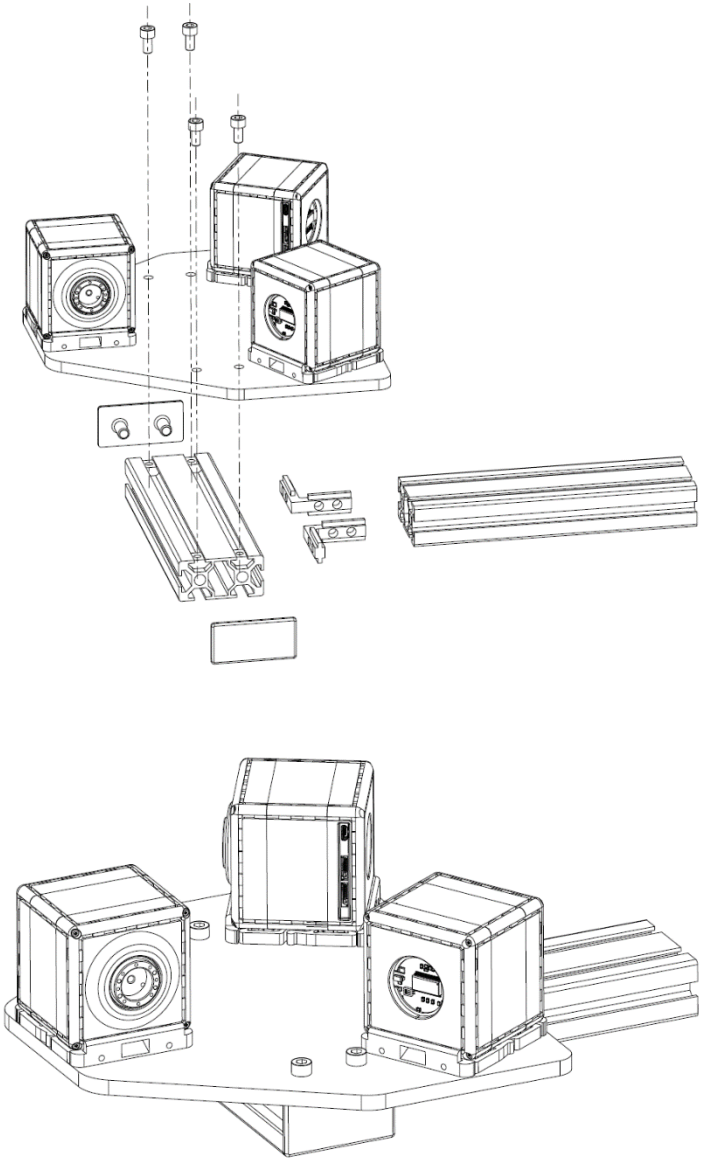

Figure 5-3 Assembly with the profiles.

5.2 Assembly of the links

Assembly the components 6030 on the actuators by three C-flanges. Make sure to assembly the flanges as shown in Figure 5-4, without moving the output shaft.

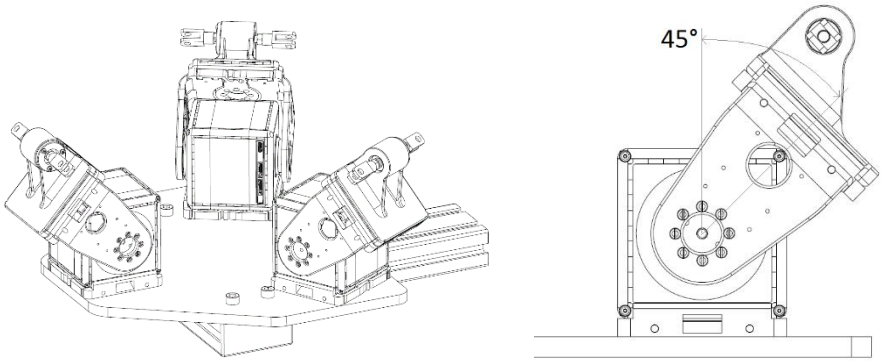

Figure 5-4 Assembly of the links on the actuators.

Prepare the end-effector connecting the three components 6031 on the plate 6032, by 12 screws 3026 (Figure 5-5).

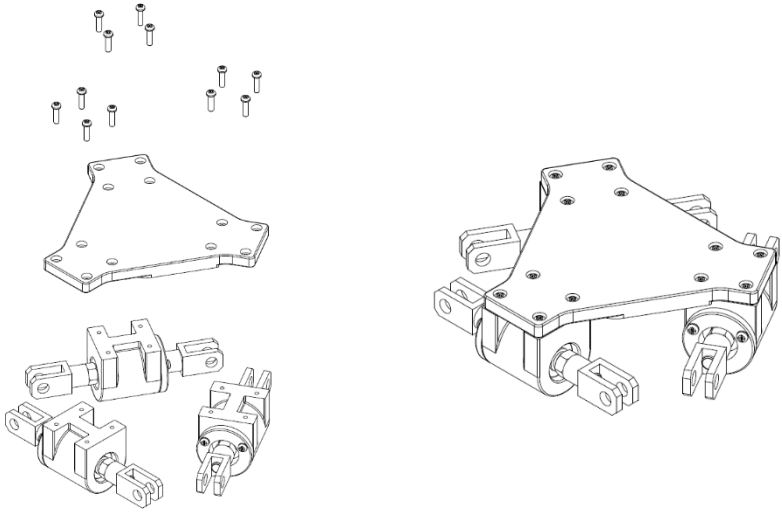

Figure 5-5 Plate of the end-effector.

Assembly

Assembly a flat flange on the plate by two screws 3027 and put two nuts 3008 in the other two holes. Make sure to assembly the flange in the right position, as shown in Figure 5-6.

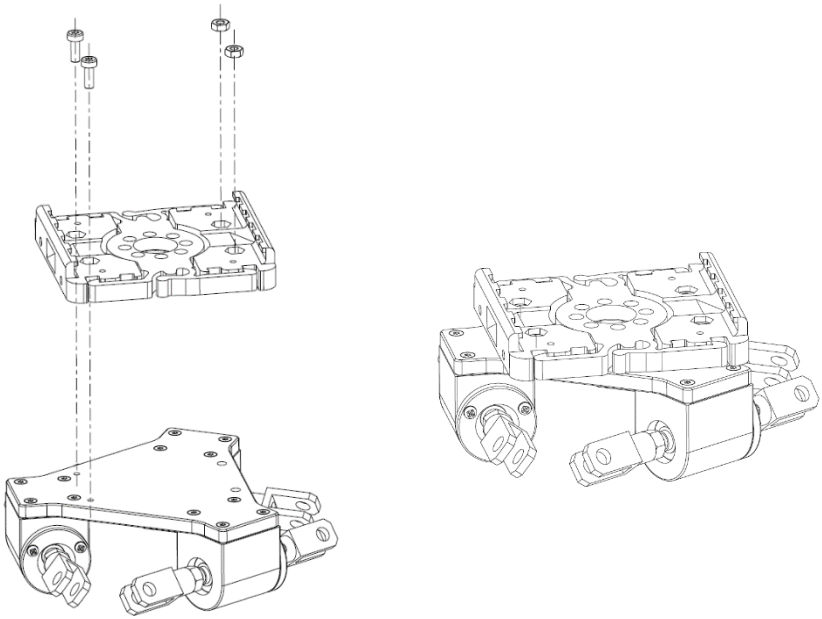

Figure 5-6 Assembly of the flat flange on EE plate.

5.3 Gripper (components are provided in Kit4)

Assemble the 1005 component on a *Flat Flange* using four 3008 nuts and two 3007 screws, as shown in figure below.

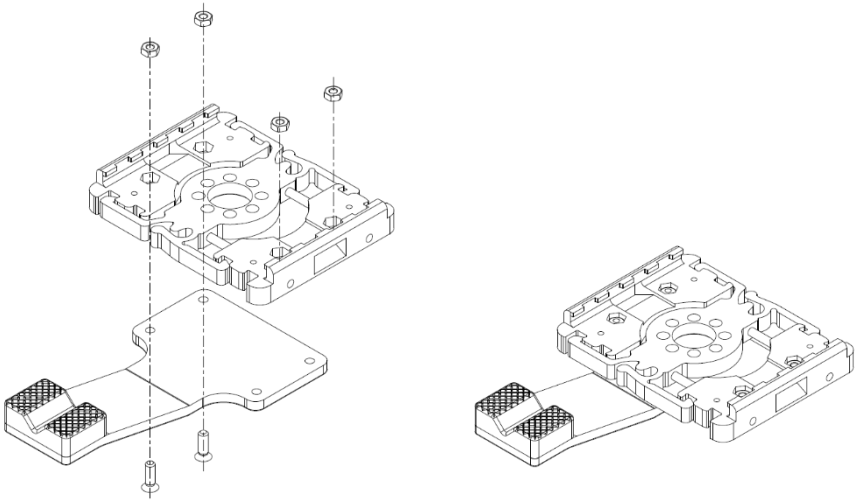

Figure 5-7: Fixed finger assembly procedure

Assemble the fixed finger on the qbmove closing the *Flat Flange* and locking it by two 3007 screws, as shown in Figure 5-7. Make sure to orient the qbmove as shown, to have the electrical connectors as indicated.

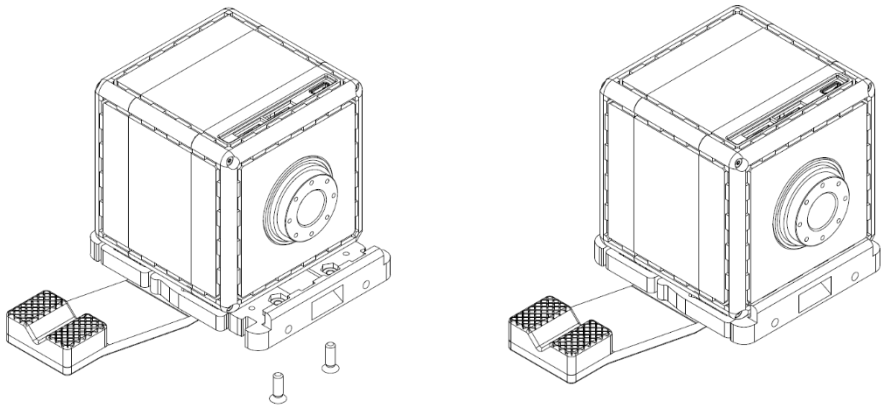

Figure 5-8: Fixed finger qbmove assembly procedure

Assemble the second finger, component 1006, using the 3003 screws, as shown in Figure 5-8. The qbmove must be equipped with a rear pulley, as like in a *C Flange* mounting.

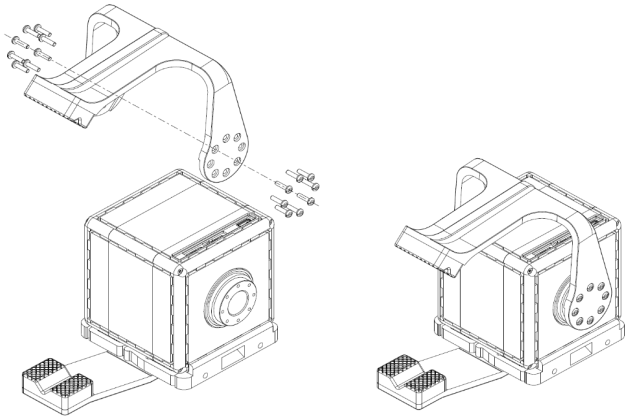

Figure 5-9: Assembled gripper

Now you can assembly the gripper on the EE plate of Delta robot, by the flat flange assembled before. Put the gripper on the flange in the right position (Figure 5-10), then close the flange.

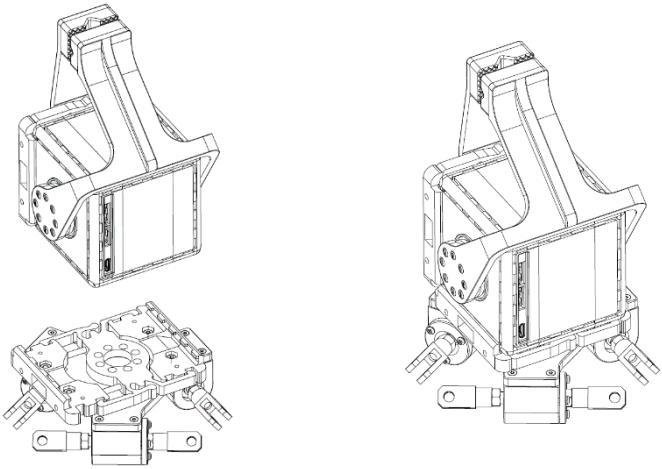

Figure 5-10 Positioning of the gripper on the EE.

Fix the Flange by two screws 3021 on the other side of the plate (Figure 5-11).

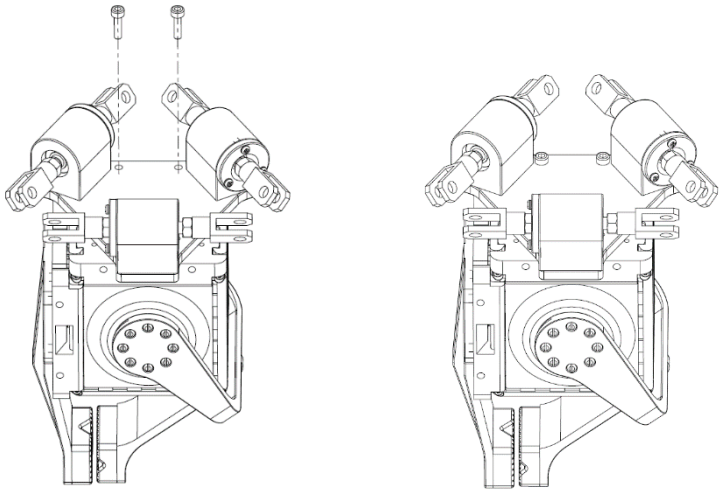

Figure 5-11 Fixing of the flat flange.

5.4 Support structure

Assembly a pair of profiles 3016 connecting each other by a stirrup 3020, moreover assembly a component 3017 and a component 3019.

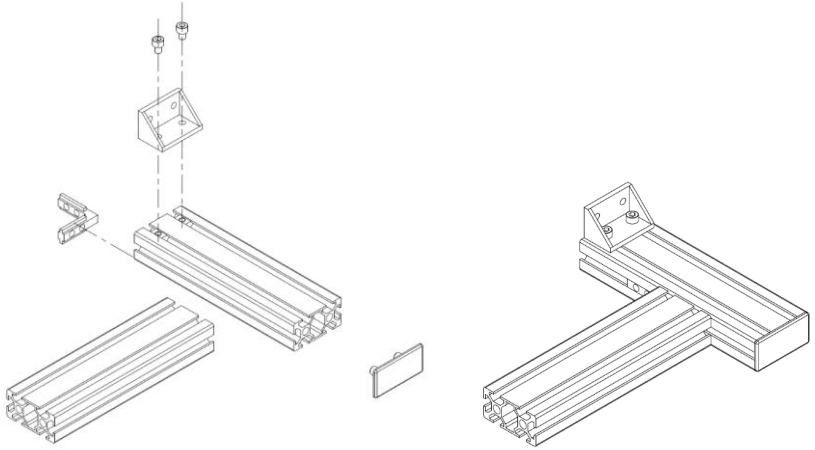

Figure 5-12 Assembly of two profile for the structure base.

Use the same components to assembly a symmetrical system.
Assembly the two bases with the square profile 3015 using nuts 3014 and screws 3010, then assembly a stirrup 3017 and place the cup 3018.

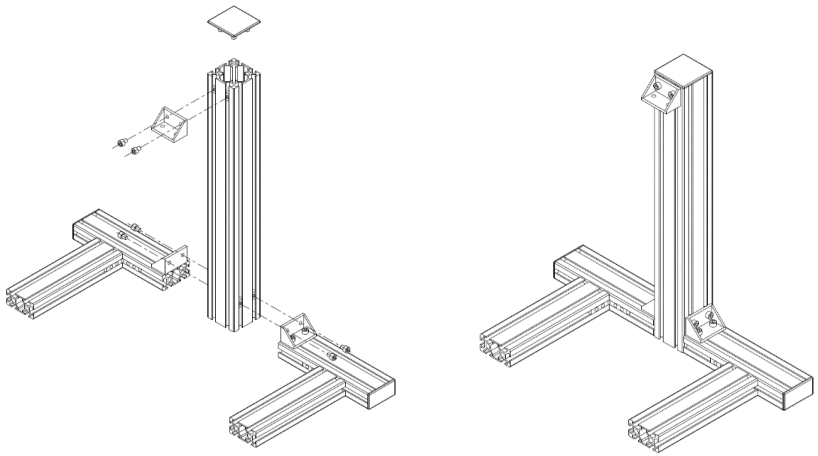

Figure 5-13 Assembly of the square profile 3015.

Assembly the QB Delta robot on the structure by two nuts 3014 and 2 screws 3010 (Figure 5-14).

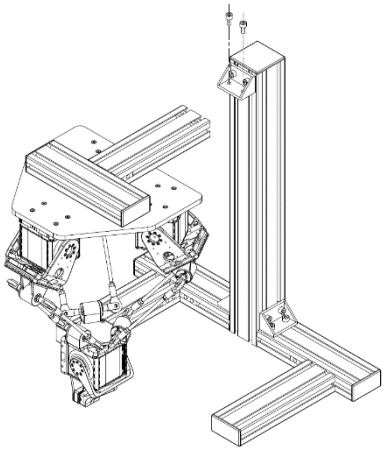

Figure 5-14 Delta robot on the structure.

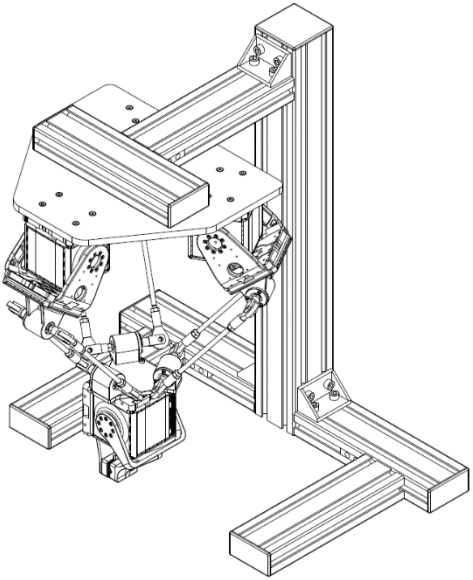

Figure 5-15 qb Delta.

You have done!

6 Software

This chapter explains how to install the software, connect the actuators and use them.
The qbmove GUI will help you to test and use the single qbmove; A Simulink package also can be used to control the qbMoves; The qbAPI software protocol lets you build a custom program to use the devices you have; Afterwards you will see where to find ROS libraries and how to use them to create your project.

6.1 Installing the drivers

Independently from the chosen solution between GUI, Simulink package or qbAPI tools, it is necessary to download and install the drivers from FTDI's site.

Instructions vary between operative systems, but it is only necessary to install the drivers under MAC OSX or Windows.

- **Mac:** It is necessary to install the FTDI serial drivers to make possible the device is seen as serial port (i.e.: /dev/tty.usbserial-128).
- **Windows:** It is necessary to install the FTDI serial drivers to make possible the device is seen as serial port. Before using anyone of the software utilities provided, is good use to check on which COM serial port the device has connected. The supported ones are between COM1 and COM9. To change the port number, go under Control Panel > Hardware and Sound > Device Manager.
  Open the Ports (COM & LPT) drop down menu, right click on the COM port and select Proprieties.
  Select the Port Settings tab and then click on Advanced. Once in Advanced menu select from the drop-down menu a COM number between COM1 and COM9 and click on OK.

The device should now be recognized properly.

6.2 qbmove GUI

The qbmove GUI is an application useful to quickly test a qbmove and eventually to diagnose troubles about the hardware or software.

6.2.1 Installation procedure

- **Mac:**
  If not already installed, it is necessary to install the FTDI serial drivers to make possible the device is seen as a serial port.
  Double click on the App and use it. There is also a .dmg package. You can open it and move the application to your dock or the Application folder.**Windows:** To use the GUI is only necessary to run the *"qbtools.exe"* file
- **Windows:**
  If not already installed, it is necessary to install the FTDI serial drivers to make possible the device is seen as a serial port. If the serial port is not seen on the GUI main window, it is possible that the system has recognized the COM port with a high COM number. The supported serial ports are from COM1 to COM9. To change the port number, go under Control Panel > Hardware and Sound > Device Manager.
  Open the Ports (COM & LPT) drop down menu, right click on the COM port and select Proprieties.
  Select the Port Settings tab and then click on Advanced. Once in Advanced menu select from the drop down menu a COM number between COM1 and COM9 and click on OK.
  The device should now be recognized properly.
- **Unix:** Before using the GUI, it is mandatory to add user to the dialout group. To do so, you

must execute:

```
sudo adduser user_name dialout
```

where `user_name` is the username under which the GUI is used. Once this command is executed, it is necessary to log out and back in, for the changes to take effect.

6.2.2 Main Layout

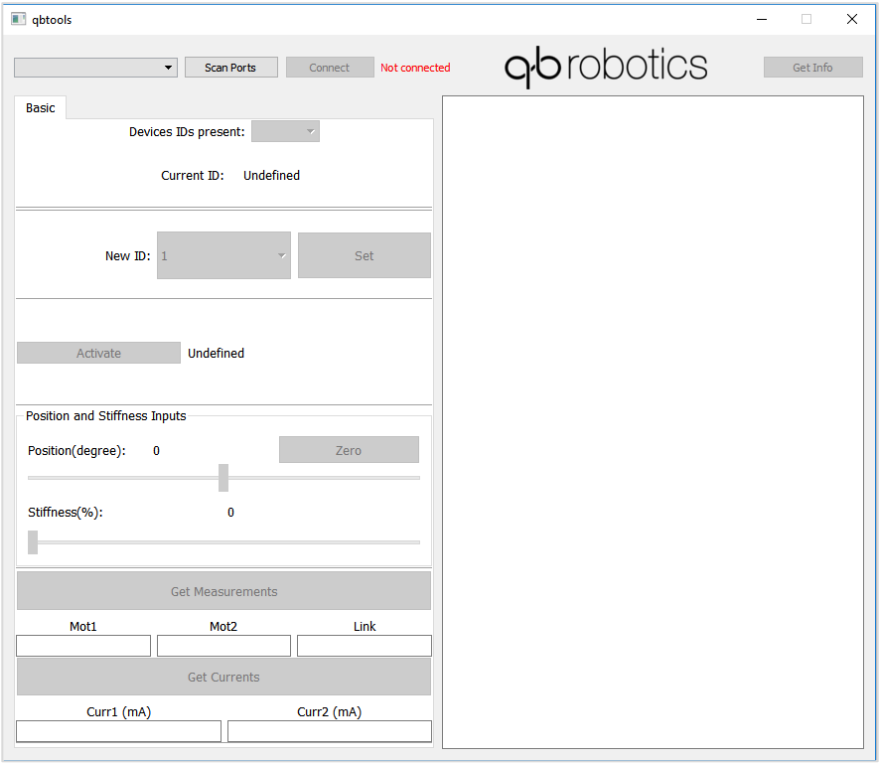

Figure 6-1: qbMove GUI main window

Application is structured in one tab only:

- **Basic:** Basic commands. ID setting, activation of the board, measurements and currents reading, position and current inputs.

To use the qbMove with this application you have to click on “Scan Ports”. If the qbMove is properly connected, you’ll see the serial port in the little window on the left. Once the serial port is seen you could connect the device clicking on the Connect button. This operation, if successful, enables all of the buttons and you should see a green “Connected” text near the Connect button. The qbmoves must be powered with 24V power supply. (Figure 6-2).

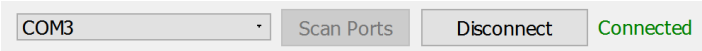

Figure 6-2: Serial Port connection

“Get Info” button prints useful information about qbMove and its control board, in the blank window on the right side of the application. e.g.: firmware version, parameters values and position measurements.

6.2.3 Basic Tab

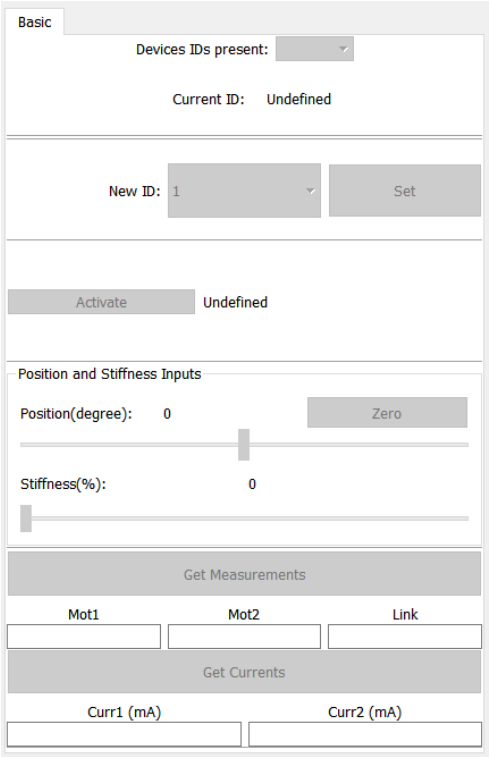

Figure 6-3: qbMove GUI Basic tab

- **Devices IDs present:** Once the device, or devices (if connected in a chain), are connected clicking on *"Connect"*, a list of their IDs is going to be showed here. Selecting the desired ID from drop-down menu will make the application connect to that device and is then possible to use that specific device only;
- **New ID:** Default ID of the board is 1. Clicking on drop-down menu will show a list of available IDs (1 to 127). Clicking on *"Set"* button will set ID equal to the New ID selected;
- **Activation:** To use qbMove you first have to activate qbMove's drivers. You can do this by clicking on *"Activate"*. The string next to the button will show board' state of activation.
- **Inputs:** Depending on the control modality set, which by default is *"Position"*, it is possible to move the drivers of the qbMove using sliders or Motor 1/2 Input fields. The corresponding groupBox relative to its control modality is activated/deactivated when the control modality is set (in advanced tab);

- **Measurements and Currents:** Clicking on *"Get Measurements"* and *"Get Currents"* will show encoder measurements for the first one and current measurements, for the second one. Encoder measurements are shown in encoder ticks, Currents in mA;

IMPORTANT Remember to power the qbMove, or the chain, before using it.

6.3 Simulink package

6.3.1 Installation

6.3.1.1 Download

The first necessary steps to use the qbMove with Simulink, are:

1. Download the qbmove_simulink repository
2. Download the qbAPI repository

Before compiling be sure to have a folder tree like that, rename the folders removing the "-master" suffix:

- working_directory
  - qbAPI
  - qbmove_simulink

6.3.1.2 The compiler

1. Be sure to have a C compiler installed in your system (tested with Xcode under Mac OS X and Microsoft Windows SDK for Windows 7 under Windows).
2. Execute the command "mex -setup" on your Matlab Command Window to let Matlab use your compiler.

   If you have trouble in this step, try follow this link.

6.3.1.3 Compile and Include the library

The library can be used on various operating systems such as MacOS X, Windows, Linux, but you need to recompile it for your system.

[WARNING: Matlab version supported are from 2014a up to 2016b Matlab bug advised]

Move your position in "`qbmove_simulink`" folder, type install and press return. It will install the library depending on your MATLAB configuration and set necessary path. If no error is returned the libraries are correctly compiled and it is displayed a successful comment on shell.

6.3.2 Using the libraries

6.3.2.1 Create a new simulink model

1. Click on the "Simulink Library" icon or type "simulink" in the Matlab Command Window.
2. Create a new model using: "File -> New -> Model"
3. In the new model go to: "Simulation -> Model Configuration Parameters". Under "Solver" select as *Type* "Fixed-Step", as *Solver* "ode1 (Euler)" or "discrete (no

continuous states)" and as *Fixed-step size* type the delta_t in seconds. (e.g. if you want to retrieve positions and set new inputs every 5 milliseconds, type 0.005). Click "OK".

Every qbmove needs at least 1 millisecond to read and set new positions, so the minimum step time allowed is 1 millisecond multiplied by the number of qbmoves in the chain.

4. You should be able to see the various blocks under libraries in Simulink Library Browser. From here drag and drop the desired blocks onto your model.

6.3.2.2 The blocks

- **qbmove**

  This block is the interface between your computer and the real qbMove. By default, you will see 4 input ports and 4 output ports. This means that the block is set to both receive information from the sensors and send new position reference and stiffness to the qbMove. If you double-click to the block, the Function Block Parameters will open and you will be able to set the parameters of the block.

  The block inputs have the following functions:

  - **Handle:** Is used to connect the *"QB Move Init"* block which stores the serial port
  - **Pos.1:** This input depends on the Input modality set. It could have 2 values: *pos.1* or *eq.pos.* The first one is used when the *"Prime Movers"* Modality is chosen, the second one is used when one between *"Equilibrium Position and Stiffness Preset"* or *"Equilibrium Position and Stiffness Preset Percentage"* modality is chosen.
  - **Pos.2:** As the *pos.1* input, this input can change depending on which input modality is chosen. It could have 3 values: *pos.2, s.preset* and *stiff 0-100%*. The first one is used when the *"Prime Movers"* modality is chosen, the second one is used when *"Equilibrium Position and Stiffness Preset"* modality is chosen and the third one is used when the *"Equilibrium Position and Stiffness Preset Percentage"* modality is chosen.
  - **Activation:** This input is used when the *"Activation on Startup"* checkbox is unchecked. If there is this input, a different from zero signal must be routed there if the device needs to be activated, vice versa if needs to be deactivate. Also, works at runtime and the devices can be activated or deactivated at runtime. If multiple devices are used, this input must receive an array as wide as the number of devices connected.

The block outputs have the following functions: **Pos.1:** Gives the position measurements of the first motor of the device. It is the only one output that gives significant measurements for the qbHand.

- **Pos.2:** Gives the position measurements of the second motor of the device. It gives measurements for the qbHand but these are not significative.
- **Pos.L:** Gives the position measurement of the qbMove shaft. It returns zero if used with the qbHand.
- **Error:** Debug output. A terminator block can be connected to it.

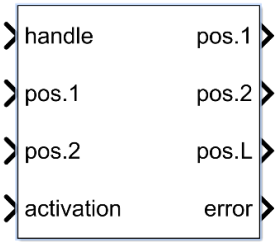

Figure 6-4: qbMove simulink block

For what concerns the block parameters, the explanation follows below:

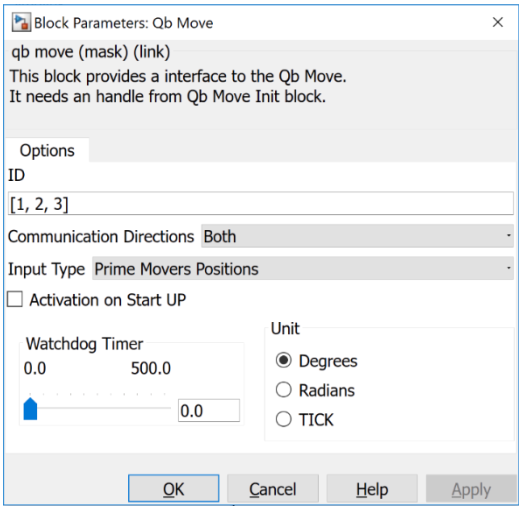

Figure 6-5: qbMove Simulink Block parameters

ID: If it is connected only one device, the ID could be put without brackets, otherwise the syntax is like in the picture.

Communication direction: Is used to show which ports are shown on the block. If it is on *"Both"* the block will have the ports like on the above image. If it is on *"Tx"*, it will have only the output ports. If it is on *"Rx"*, it will have only the input ports.

Input Type: This is used to decide what kind of inputs the device will receive on the input ports.

- *"Equilibrium Position and Stiffness Preset"* – This modality works only with the qbmove. It drives the shaft position and its stiffness. Both the inputs are in the measurement unit defined by the field *"Unit"*
- *Equilibrium Position and Stiffness Preset Percentage"* – This modality works only with the qbmove. It drives the shaft position and its stiffness. The position is in the measurement unit defined by the field *"Unit"* and the stiffness is in percentage, from the minimum to the maximum of the device.
- *"Prime Movers Positions"* - the inputs will be directly the motor positions. This is the <u>only</u> modality that works with the qbHand.

It could be dangerous to use this modality with the qbmove. The motors and the cable can be seriously damaged and the device could work no more. Use this modality at your own risk.

Activation on Startup: If this checkbox is set, the block will have only three inputs and the device, or the devices, will activate when the simulation is started. Otherwise an *"Activation"* input port will show and a 0/1 signal should be routed to that input port.

Watchdog Timer: Setting this value to a value different from 0, will set a parameter on the device that is going to deactivate that device if it doesn't receive inputs in the time defined by the Timer.

Unit: This parameter defines the measurement unit of the inputs and outputs of the device. The Tick value is referred ad the encoder ticks of the sensors mounted on the device motors.

- **qbmove Init**

  When a Simulink scheme is made, this block is mandatory because it stores the communication port of the device. The output must be connected to the *"handle"* input of the QB Move block.

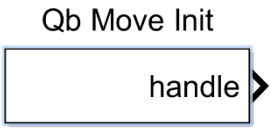

Figure 6-6: qbMove Init block

The serial port name varies between operative systems:

- **WINDOWS:** Under windows the devices are Communication Ports COM#. To set the port name, double click on the block and insert in the line edit 'COM#' with the right number of the serial port. The communication baudrate should be put equal to 2000000.

- **UNIX:** On Unix the devices are usually seen as /dev/tty.USBx. To set the port name, double click on the block and insert in the line edit '/dev/tty.USBx' with the right number of the serial port. The communication baudrate should be put equal to 2000000.
- **MAC OSX:** On OSX the devices are usually seen as /dev/tty.usbserial-XX. To set the port name, double click on the block and insert in the line edit '/dev/tty.usbserial-XX' with the right number of the serial port. The communication baudrate should be put equal to 2000000.

- **qbmove – Get current**

  This block is used to retrieve currents from the device, or the devices, connected.

  Clicking on the block will open the Options panel. It is possible to set the IDs of the devices connected, in the same way of the QB Move block. The input port, in order to retrieve the currents, must be connected to the output of the QB Move Init block. The outputs are the currents of motors of the devices. In case of a qbHand connected, the only significant output is the first one, because the hand has one motor only.Figure

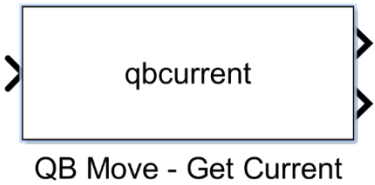

Figure 6-7: qbMove Get Current block

- **qbmove – Get Curr and Meas**

  This block works the same way of the QB Move block, but with also the benefit of the QB Move – Get Current block. The motor measurements are all returned at the same time. With this block, there is no need to use the QB Move and the QB Move – Get Current block, it is all done with this one. The parameters of the block are the same of the QB Move one, so refer to that one for any explanation on those.

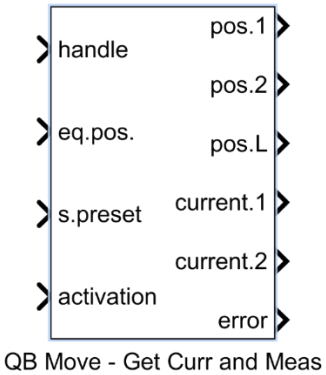

Figure 6-8: qbMove Get Current and Measurements block

qbmove – get EMG

In the same way of the QB Move – Get Currents this block get the EMG (electromyographic) sensors measurements from the devices connected. The input must be the output of the QB Move Init block and the outputs are the measurements. This block gives significant measurements only when a qbHand with EMG sensors is connected to it. Otherwise all the measurements will be equal to 0.

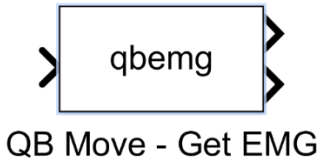

Figure 6-9: qbMove Get Emg block

QB Pacer

This is a mandatory block. Every simulation schematic needs to have one. Is used make the simulation go as the same velocity as the devices connected. As you can see in the following example, is always used with a Clock to see if the commands of the simulation are going at the same velocity of the device, or slower.

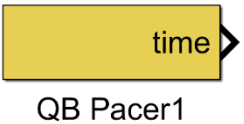

Figure 6-10: qbPacer block

6.3.2.3 Example

In the main folder, you will find an example called "qbmove_example.slx". This is a simple configuration which you can use to test your qbmove or you qbhand.

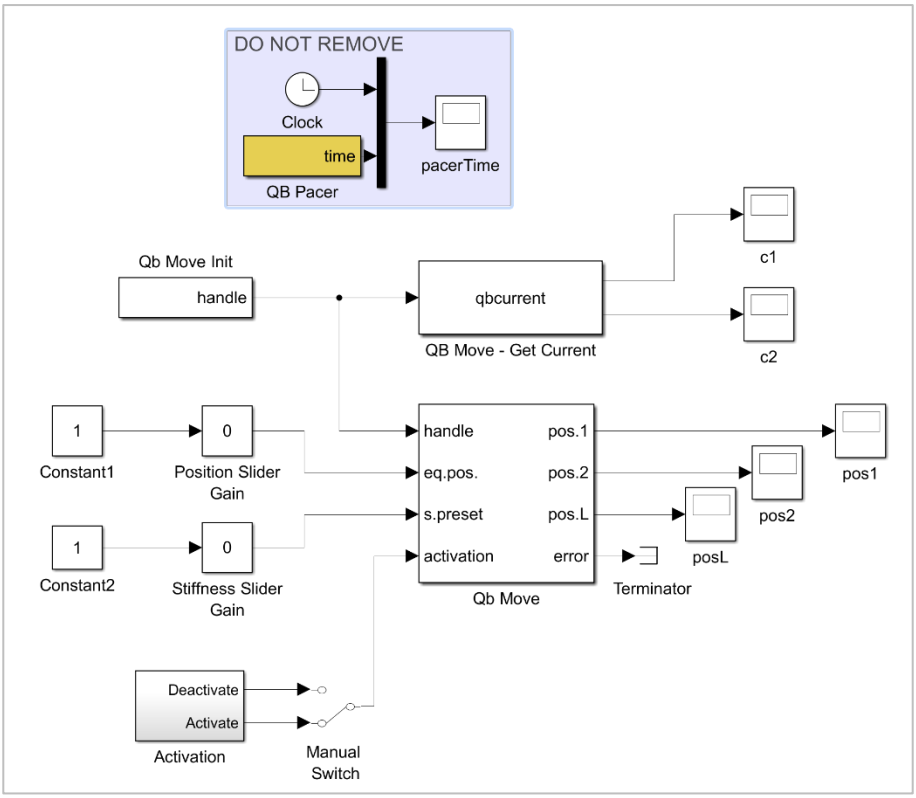

Figure 6-11: qbMove control Simulink example

This example is structured for one device only, with ID equal to 65. As you can see in the above image on the left there are two constant inputs with a slider gain each, which can be tweaked while the simulation is running and you can see the device will move. In this case the input modality is chose to be *"Equilibrium Position and Stiffness Preset"* so, the example, as it is, will work only on a qbMove. If you need the example to work on a qbHand, change the modality with *"Prime Movers Position"* and follow the instructions in the previous section.

On the right there are 3 displays where you can read the values in the measurement unit chosen of the 3 sensors (depending on the device used, the value of the outputs changes. Refer to previous section for better explanation).

The error output is used to debug communication. It's not needed to make the simulation work, so you can leave a terminator block connected.

As you can see, the QB Pacer block is used to confront time with the clock of the simulation. The two times, the clock and the real time, are confronted in a scope. There should be two lines in it. If the simulation step is set correctly the two lines should be overlapped. If the two lines diverge, a bigger step size must be set.

In this configuration, the step size is set to 2 milliseconds and the computer should be able to run it in real time. This means that every 2 milliseconds you send a new reference position to the qbMove and the current position is read. Furthermore, a current reading is done and you can see the milliampere absorbed by each of the two motors.

6.4 qbAPI software protocol

6.4.1 Compiler Installation

Before using the qbAPI on your system, if not already installed it is good use to install a c++ compiler. Below here are listed all the necessary instructions for each operative system.

- **Unix:** You should have both *gcc/g++* and *make* already installed.
- **Mac OSX:** Download *XCode* from Mac App Store, this will install *gcc/g++* and *make* utility.
- **Windows:** Download MinGW and install it. Open MinGW Installation Manager, from the left panel select basic setup, then from the right panel select mingw32-base and mingw32-gcc-g++, then click on Installation -> Apply Changes. This will install the *gcc/g++* compiler.
  It is necessary to provide Windows the path to the executable binaries. To do so, go on Control Panel>System and Security>System and click on Advanced System Settings. Then select Environment Variables and look for path, select it and click edit.
  - In Windows 10 click on New and add a new row with the value C:\MinGW\bin;
  - In previous Windows versions go to the end of Variable Value field add a ";" separator and append the path to binary folder for gcc, which is C:\MinGW\bin;

Download the make utility from here. Follow the installation instructions. When the installation procedure has ended you will need to add the binary path to the Environment Variables. To do that follow the previous steps. The binary folder for make utility is in C:\Program Files (x86)\GnuWin32\bin.

NOTE: if you have the command shell (CMD) already opened when performing the installation, you probably will need to close and re-open to use the tools.

6.4.2 Integrating the functions

In order to integrate the functions within your code, it is necessary to include the *commands.h* and *qbmove_communications.h* libraries and compile *qbmove_communications.cpp* with your code.
Then is only necessary to call the functions when it is needed.
All the functions have an explanation, in form of comments, in "*qbmove_communications.h*".
Following here there will be a brief explanation of the functions and what are used for.

6.4.3 Basic Functions

In most cases these will be all the necessary functions that you will need to use the qbHand or qbMove within your system.

6.4.3.1 RS485ListPorts

This function is used to retrieve the name of all serial ports connected to the computer. If no serial ports are found, a '0' value is returned. Otherwise the number of serial ports connected to the computer is returned.

The port name is used to create a file descriptor associated to that name.
Arguments:

- `char list_of_ports[10][255]` – List of ports connected

Example:

```
int     i, num_ports;
char    list_of_ports[10][255];

num_ports = RS485listPorts(ports);

for(i = 0; i < num_ports; ++i)
     puts(ports[i]); //prints to screen all the connected ports
```

6.4.3.2 openRS485

This function, once a list of serial ports is defined, and a series of file descriptors are created, is used to open the serial port and allow communication with the device connected.
Arguments:

- `comm_settings *comm_settings_t` – Structure containing info about communication settings
- `const char *port_s` – String of the serial port path
- `int BAUD_RATE` – Default baud rate of the communication. By default, is equal to 2MBaud

Example:

```
comm_settings   comm_settings_t;
openRS485(&comm_settings_t,"/dev/tty.usbserial-128");
```

```
if(comm_settings_t.file_handle == INVALID_HANDLE_VALUE)
    // ERROR
```

6.4.3.3 closeRS485

This function is used to close communication between the computer and the device. Is necessary to use it before a program is terminated.

Arguments:

- `comm_settings *comm_settings_t` – Structure containing info about communication settings

Example:

```
comm_settings   comm_settings_t;

openRS485(&comm_settings_t,"/dev/tty.usbserial-128");
//Doing stuff
closeRS485(&comm_settings_t);
```

6.4.3.4 commActivate

This function activates the motor drives (or the motor drive if only one present) of the device. It is necessary to activate the motor drives before using the device, otherwise the device will not work.

Arguments:

- `comm_settings *comm_settings_t` – Structure containing info about communication settings
- `int id` – The device's ID number
- `char activate` – The activation value. 0x03 activates the board, 0x00 deactivates it

Example:

```
comm_settings   comm_settings_t;
int             device_id = 65;

openRS485(&comm_settings_t,"/dev/tty.usbserial-128");
commActivate(&comm_settings_t, device_id, TRUE);
closeRS485(&comm_settings_t);
```

6.4.3.5 commGetActivate

This function is used to retrieve the activation status of the board. It is mostly used after the commActivate function to see if the board was correctly activated or deactivated. It is needed an inactive program time if used right after the commActivate.

Arguments:

- `comm_settings *comm_settings_t` – Structure containing info about communication settings
- `int id` – The device's ID number
- `char *activate` – Device activation status

Example:

```
comm_settings        comm_settings_t;
int                  device_id = 65;
char                 activation_status;

openRS485(&comm_settings_t,"/dev/tty.usbserial-128");

if(!commGetActivate(&comm_settings_t,                 DEVICE_ID,
activation_status))
     printf("Activation status: %d\n", &activation_status);
else
     puts("Couldn't retrieve activation status.");
closeRS485(&comm_settings_t);
```

6.4.3.6 commSetInputs

This function is used to give the device reference inputs to motors. The inputs are counted in encoder ticks. Be aware that the inputs depend on the device used. The qbhand accepts only one input value, on the other hand the qbMove needs two input values. Be careful to use this function with the qbmove. The device can be severely damaged if the function is not used properly. With that device is recommended to use the commSetPosStiff rather than the commSetInputs.

Arguments:

- `comm_settings *comm_settings_t` – Structure containing info about communication settings
- `int id` – The device's ID number
- `short int inputs[]` – The array used to store the inputs to be sent to the devices

Example:

```
comm_settings        comm_settings_t;
int                  device_id = 65;
short int            inputs[2];

openRS485(&comm_settings_t,"/dev/tty.usbserial-128");

inputs[0]    = 1000; inputs[1]    = -1000;
commSetInputs(&comm_settings_t, device_id, inputs);
closeRS485(&comm_settings_t);
```

6.4.3.7 commSetPosStiff

This function is used to give the device reference inputs to motors. Is used only with a qbMove device. The two inputs are the output shaft position (in degrees) and the stiffness preset of the shaft. The stiffness preset goes from 0 to 30 degrees.

Arguments:

- `comm_settings *comm_settings_t` – Structure containing info about communication settings

- `int id` – The device's ID number
- `short int inputs[]` – The array used to store the inputs to be sent to the devices

Example:

```
comm_settings       comm_settings_t;
int                 device_id = 65;
short int           inputs[2];

openRS485(&comm_settings_t,"/dev/tty.usbserial-128");

inputs[0]   = 100;          //Degrees
inputs[1]   = 30;           //stiffness preset
commSetPosStiff(&comm_settings_t, device_id, inputs);
closeRS485(&comm_settings_t);
```

6.4.3.8 commGetInputs

This function is used to retrieve the inputs given to the device.

Arguments:

- `comm_settings *comm_settings_t` – Structure containing info about communication settings
- `int id` – The device's ID number
- `short int inputs[]` – The array used to store the input values to be taken from the devices

Example:

```
comm_settings       comm_settings_t;
int                 device_id = 65;
short int           inputs[2];

openRS485(&comm_settings_t,"/dev/tty.usbserial-128");

if(!commGetInputs(&comm_settings_t, DEVICE_ID, inputs))
     printf("Inputs: %d\t%d\n",inputs[0], inputs[1]);
else
    puts("Couldn't retrieve device inputs.");

closeRS485(&comm_settings_t);
```

6.4.3.9 commGetMeasurements

This function is used to retrieve the encoder measurements from the device. The measurements returned are in encoder ticks. If you are using the qbMove, the constant to convert from ticks to degrees is 360/32768.

Arguments:

- `comm_settings *comm_settings_t` – Structure containing info about communication settings
- `int id` – The device's ID number

- `short int measurements[]` – The array used to store the encoder measurements of the device connected

Example:

```
comm_settings       comm_settings_t;
int                 device_id = 65;
short int           measurements[3];

openRS485(&comm_settings_t,"/dev/tty.usbserial-128");

if(!commGetMeasurements(&comm_settings_t,              DEVICE_ID,
measurements)){
     printf("Measurements:\t");
     for(int i = 0; i < 3; i++)
         printf("%d\t", measurements[i]);
     printf("\n");
}
else
    puts("Couldn't retrieve measurements.");

closeRS485(&comm_settings_t);
```

6.4.3.10 commGetCurrents

This function is used to retrieve the motor currents from the device.

Arguments:

- `comm_settings *comm_settings_t` – Structure containing info about communication settings
- `int id` – The device's ID number
- `short int currents[]` – The array used to store the motor currents of the device connected

Example:

```
comm_settings   comm_settings_t;
int                 device_id = 65;
short int           currents[2];

openRS485(&comm_settings_t,"/dev/tty.usbserial-128");

if(!commGetCurrents(&comm_settings_t, device_id, currents))
   printf("Measurements: %d\t%d\t%d\n",currents[0], currents[1]);
else
   puts("Couldn't retrieve currents.");

closeRS485(&comm_settings_t);
```

6.4.3.11 commGetEmg

This function is used to retrieve the electromygraphic sensors measurements from the device. It works only with a qbHand which has electromyographic sensors connected.

Arguments:

- `comm_settings *comm_settings_t` – Structure containing info about communication settings
- `int id` – The device's ID number
- `short int emg[2]` – The array used to store electromyographic sensors values

Example:

```
comm_settings    comm_settings_t;
int                 device_id = 65;
short int        values[2];

openRS485(&comm_settings_t,"/dev/tty.usbserial-128");

if(!commGetEmg(&comm_settings_t, device_id, values));
   printf("Measurements: %d\t%d\t%d\n", values[0], values[1]);
else
   puts("Couldn't retrieve emg values.");

closeRS485(&comm_settings_t);
```

6.4.3.12 commGetCurrAndMeas

This function is used to retrieve both motor currents and encoder measurements from the device with only one command.

Arguments:

- `comm_settings *comm_settings_t` – Structure containing info about communication settings
- `int id` – The device's ID number
- `short int *values` – The array used to store motor currents and encoder measurements of the device connected

Example:

```
comm_settings    comm_settings_t;
int              device_id = 65;
short int        values[5];

openRS485(&comm_settings_t,"/dev/tty.usbserial-128");

if(!commGetCurrAndMeas(&comm_settings_t, device_id, currents)){
    printf("Currents: %d\t%d\t%d\n",values[0], values[1]);
    printf("Measurements:
%d\t%d\t%d\n",values[2],values[3],values[4]);
    }
else
```

```
    puts("Couldn't retrieve currents and measurements.");

closeRS485(&comm_settings_t);
```

6.4.4 Code Examples

6.4.4.1 Theoretical Example

The purpose of this example is to show how the functions are supposed to be used, in which order and with what arguments.

This is not a complete program that use the device with all its capabilities but it is only an example to see what is the correct order of functions and what functions should be used to integrate the device within your system.

This example may not work properly; We suggest to not use it as it is in a complete program.

This example and the functions used in it, may work only for a qbMove device. For a qbHand some functions may change.

Code:

```
int device_id = 1;        // By default the Device ID is 1. Check
                            your device
                         // use the GUI to know what ID has yours
comm_settings comm_settings_t;
const int deg_to_tick = 32768/360;
int num_ports = 0;
char ports[10][255];
char port[255];
short int pos, stiff;
char aux_char;


// Firstly all connected ports must be recognized
num_ports = RS485listPorts(ports);
strcpy(port, ports[0]); //We select the first one, just as example

// Open the port
openRS485(&comm_settings_t, port_s);
if(comm_settings_t.file_handle == INVALID_HANDLE_VALUE)
{
```

```
     puts("Couldn't connect to the serial port.");
    return 0;
}
usleep(500000);
puts("Port correctly opened\n");

// Activate motors
commActivate(&comm_settings_t, device_id, 1);

pos = 0;
puts("Insert 'w' and press enter to move the shaft to the positive
limit, 's' to move the shaft to the negative limit, 'x' to make
the shaft rigid, 'a' to move to the negative limit with rigid
shaft, 'd' to move to the positive limit with rigid shaft, 'q' to
quit the program");
scanf("%c", &aux_char);

switch(aux_char) {
     case 'w': //Send positive input
       pos = 180 * deg_to_ticks;
       inputs[0] = pos;
       inputs[1] = 0;
       commSetPosStiff(&comm_settings_t, device_id, inputs);
     break;

     case 's': //Send negative input
       pos = -180 * deg_to_ticks;
       inputs[0] = pos;
       inputs[1] = 0;
       commSetPosStiff(&comm_settings_t, device_id, inputs);
     break;

     case 'x': //Send stiff input
       stiff = 3000;
       inputs[0] = 0;
       inputs[1] = stiff;
       commSetPosStiff(&comm_settings_t, device_id, inputs);
     break;


     case 'a': //Send negative stiff input
       pos = -180 * deg_to_ticks;
       stiff = 3000;
       inputs[0] = pos;
       inputs[1] = stiff;
       commSetPosStiff(&comm_settings_t, device_id, inputs);
     break;

     case 'd': //Send positive stiff input
```

```
        pos = 180 * deg_to_ticks;
        stiff = 3000;
        inputs[0] = pos;
        inputs[1] = stiff;
        commSetPosStiff(&comm_settings_t, device_id, inputs);
      break;

     case 'q': // Close the program
        commActivate(&comm_settings_t, device_id, 0); // Deactivate
motors
        closeRS485(&comm_settings_t);  // Close serial port
      break;

      default:
      break;
}
```

6.5 ROS

6.5.1 Installation

IMPORTANT	*qbmove* related ROS packages have been tested only on Ubuntu Xenial 16.04. We are currently working to improve the compatibility with the major distributions of linux, this requires time though. We apologize for the inconvenience and we will be glad if you report any problem encountered with not yet supported distros.

6.5.1.1 Requirements

If you have never set it up, you probably need to add your linux user to the `dialout` group to grant right access to the serial port resources. To do so, just open a terminal and execute the following command:

```
sudo gpasswd -a <user_name> dialout
```

where you need to replace the `<user_name>` with your current linux username.
Then — **don't forget to** — logout or reboot.

6.5.1.2 Ubuntu Packages

If you prefer to leave your catkin workspace as it is, you can simply install all the ROS packages from the Ubuntu official repositories:

```
sudo apt update
sudo apt install ros-kinetic-qb-move
```

6.5.1.3 Sources

Install the *qbmove* packages for a ROS user is straightforward. Nonetheless the following are the detailed steps which should be easy to understand even for ROS beginners:

1. Clone both the `qb_device` and `qb_move` packages to your Catkin Workspace, e.g. `~/catkin_ws`:

```
cd ~/catkin_ws/src
git clone https://bitbucket.org/qbrobotics/qbdevice-ros.git
git clone https://bitbucket.org/qbrobotics/qbmove-ros.git
```

2. Compile the packages using `catkin`:

```
cd ~/catkin_ws
catkin_make
```

3. If you were not familiar with ROS you should be happy now: everything is done! Nonetheless, if you encounter some troubles during the compilation, feel free to ask for support on our Bitbucket.

6.5.1.4 Device setup

Connect a *qbmove* to your system is basically a matter of plugging in a USB cable. Nonetheless, **read carefully** this manual to understand all the requirements and advices about either single-device or chained configurations.

6.5.2 Usage

As shown in the following picture there are two distinct configurations to control several *qbrobotics* devices connected to the system:

- The first (and recommended) groups all the Hardware Interfaces together (thanks to the combined_robot_hw) and exploits them as a unique robot system. We have called it *"synchronous"* just to point out that every sequence of reads and writes is always done in the same predefined order.
- The second mode threats every device as an independent Hardware Interface with its dedicated ROS Node which executes the control loop independently w.r.t. the rest of the system, i.e. *"asynchronously"*.

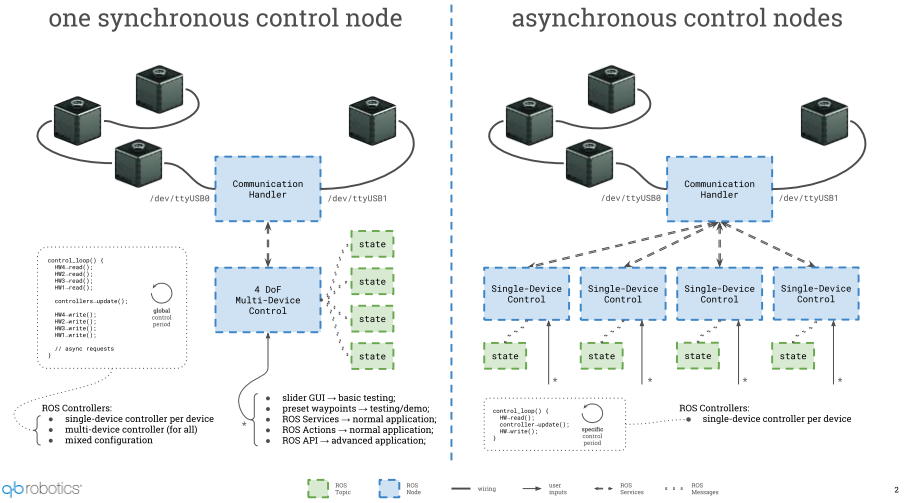

Figure 6-12: Synchronous vs asynchronous control mode (either *qb SoftHand* or *qbmove* devices)

Mixed configurations can be also achieved through a proper setup. In such a case we can think of synchronous sub-systems which execute asynchronously w.r.t. each other.
Note that in a single-device system the synchronous mode is a nonsense.
In both cases there is always one central Node which manages the shared resources for the serial communication (e.g. one or many USB ports) and which provides several ROS services to whom wants to interact with the connected devices. This Node is called *Communication Handler* and it is usually started in a separate terminal.
Please remember that in a multi-device configuration, each *qbrobotics®* device connected to your system **must have a unique ID**.

6.5.2.1 Details

To understand what is hiding under the hood, have a look at the C++ classes overview which sums up all the main concepts of our ROS packages:

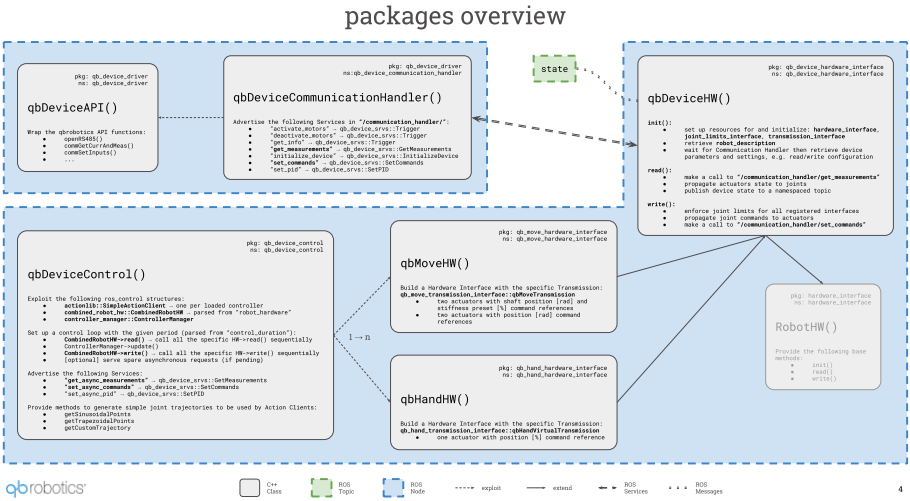

Figure 6-13: Package overview with C++ class details

6.5.2.2 Communication Handler

The Communication Handler Node has no parameters to be set, therefore it is always launched like this:

```
roslaunch qb_device_driver communication_handler.launch
```

On start, it scans the serial communication resources connected to your system and shows a list of the devices it has found. By default, it never scans again for new devices, apart from asking it explicitly during the initialization of a control Node.

This is a simple example when starting the Communication Handler with two *qbrobotics®* devices connected on two distinct USB ports:

```
[ INFO] [1524044523.511369300]: [CommunicationHandler] handles [
/dev/ttyUSB1].
[ INFO] [1524044524.426984697]: [CommunicationHandler] handles [
/dev/ttyUSB0].
[ INFO] [1524044525.218613760]: [CommunicationHandler] has found
[2] devices connected:
[ INFO] [1524044525.218696997]:                          - device
[1] connected through [/dev/ttyUSB0]
[ INFO] [1524044525.218736612]:                          - device
[2] connected through [/dev/ttyUSB1]
```

When the Communication Handler is on, it provides all the Services required to interact with the connected devices: e.g. *get info or measurements, activate or deactivate motors, set commands*, and even more... A detailed description of the services can be found in the qb_device_driver package wiki.

6.5.2.3 Control

As shown before, the control Node exploits the ros_control Controller Manager which loads and runs the device controllers. Each controller provides an Action Server that, together with the Hardware Interface structure, allows the user to send commands to the relative device and get its measurements.
From an API point of view, it is implemented an Action Client which matches the relative trajectory controller and provides a method to send Goals, i.e. command references, directly to the given device. Additionally the Action Client is subscribed to a Topic (`*_controller/command`) that can be used to send reference commands from outside the code, e.g. asynchronously from the command line, or from a higher level control Node, e.g. as a result of a planning algorithm.

It is recommended not to mix these two control modes: choose either to control the device directly from the code by extending our API or through this command Topic.
Regardless the control mode chosen for the given application, and apart form a customization of the API, the following launch file templates can be used respectively to control several devices or a single one:

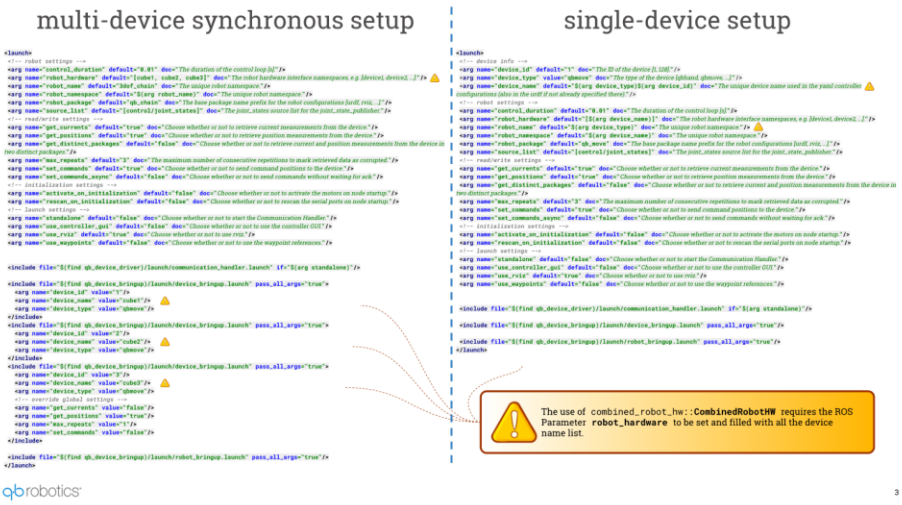

Figure 6-14: Example of launch files

6.5.2.4 Control Modes

For the sake of simplicity, we are going to cover all the control modes for a single *qbmove*, but it is just a matter of putting things together and set the launch file parameters properly to control several devices together (qb_chain_control is dedicated for such a scope).
All the control modes are initialized in the same manner but with distinct command line arguments. The default single-device control Node which brings everything up and simply waits for commands on the above-mentioned Action topic is the following:

```
roslaunch qb_move_control control.launch standalone:=true activa
te_on_initialization:=true device_id:=<actual_device_id>
```

The arguments explained

- `activate_on_initialization [false]`: Activates the motors at startup (the device will not move since the first command reference is received).
- `device_id [1]`: Each device has its own ID, you need to set the one of the actual device connect to your system.
- `standalone [false]`: Starts the Communication Handler together with the control Node. If you set this to `false` (or remove it since the default value is `false`), you need to launch the Communication Handler in a separate terminal.

It is worth noting that the activation of the motors can be postponed to improved safety if you are not aware of the state of the system at startup. To do so just set `activate_on_initialization:=false` (or remove it since the default value is

`false`) and make a call to the Communication Handler `activate_motors` Service, when your system is ready, e.g. as follows:

```
rosservice call /communication_handler/activate_motors {"id: <actual_device_id>, max_repeats: 0"}
```

Additional arguments

- `control_duration [0.01]`: The duration of the control loop expressed in seconds.
- `get_currents [true]`: Choose whether or not to retrieve current measurements from the device.
- `get_positions [true]`: Choose whether or not to retrieve position measurements from the device.
- `get_distinct_packages [false]`: Choose whether or not to retrieve current and position measurements from the device in two distinct packages.
- `max_repeats [3]`: The maximum number of consecutive repetitions to mark retrieved data as corrupted.
- `set_commands [true]`: Choose whether or not to send command positions to the device.
- `set_commands_async [false]`: Choose whether or not to send commands without waiting for ack.
- `use_rviz [true]`: Choose whether or not to use rviz. If enabled you should see a virtual *qbmove* on screen performing a similar behavior, i.e. moving the shaft and both the actuators accordingly.

The followings are particular control modes which are enabled with few parameters, but the concepts of this paragraph hold for all of them.

6.5.2.5 GUI Control

This control mode is the simpler and the one suggested to test that everything is working as expected. You are able to move the *qbmove* shaft position and its stiffness interactively, but nothing more than this.

You will probably need this only the very first times and for debugging.

To start this mode just add `use_controller_gui:=true` to the general `roslaunch` command (be sure that the opposite `use_waypoints` is not used).

After a while a GUI should appear to screen with two empty dropdown menus, a red enable button below them, and a *speed scaling* slider at the bottom.

1. Select the *Controller Manager* namespace from the left menu, e.g. `/<robot_namespace>/control/controller_manager` (where `<robot_namespace>` is an additional argument of the launch file needed with several devices). This enables the right menu which provides all the controllers available for the connected device.

2. Select the *qbmove* controller from the second dropdown menu and enable it through the circular button.
3. Two slider will appear in the GUI: the first controls the shaft position (which ranges respectively within the shaft position limits expressed in radians), while the second sets the stiffness preset, which ranges from `0` (lowest stiffness) to `1` (highest stiffness). You can also vary the speed through the bottom *speed scaling* slider if you like a faster/slower motion. No other timing constraints can be set in this mode.

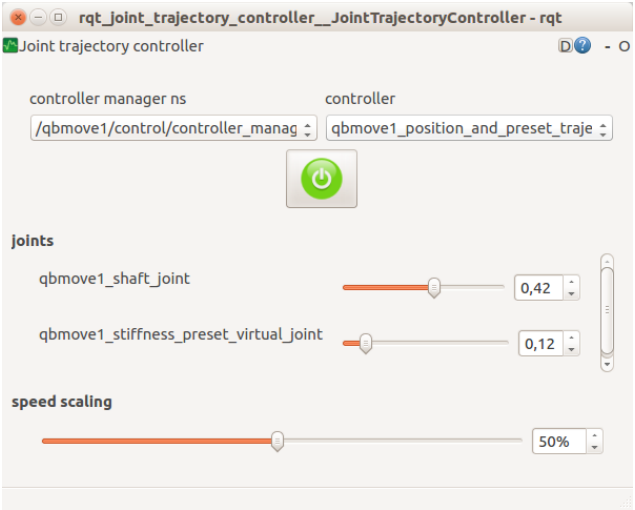

Figure 6-15: Example of GUI to control the *qbmove* (0.42 rad for the shaft position and 12% stiffness value)

6.5.2.6 Waypoint control

This control mode is a bit more structured and useful than the previous: it allows to set a fixed trajectory of any number of position waypoints (with timing constraints) and set the robot to cycle infinitely on it (because of the loop it is recommended to set the first and last waypoint in a similar configuration to avoid unwanted sudden changes).
To start this mode just add `use_waypoints:=true` to the general `roslaunch` command (be sure that the opposite `use_controller_gui` is not used). You won't see any control interface in this case but the *qbmove* should start moving according to the given trajectory, parsed from a yaml file located at

```
<robot_package>_control/config/<robot_name>_waypoints.yaml
```

where `robot_name` and `robot_package` are two additional launch file arguments.

Customization

You can modify the waypoint trajectory to replicate the behavior you want: either change the `<robot_package>_control/config/<robot_name>_waypoints.yaml` or add

another custom application-specific file in the `config` directory. In the second case, you need to set the argument `robot_name` properly when launching the command from the terminal. The waypoint configuration is as follows:

```
# Waypoints describe the desired motion trajectory:
#  - time [s]: can be either a single value or an interval for w
hich joint_positions hold
#  - joint_positions:
#     - shaft position [radians] and stiffness preset [0,1];
#  - joint_velocities: optional, use it only if you want a nonze
ro values
#     - shaft position [radians/s] and stiffness preset [0,1]/s;
#  - joint_accelerations: optional, use it only if you want a no
nzero values
#     - shaft position [radians/s^2] and stiffness preset [0,1]/
s^2;
#
# It is worth noting that, if specified, joint_positions, joint_
velocities and joint_accelerations must be of size two.

waypoints:
 -
   time: [1.0]
   joint_positions:
     <device_name>: [0.0, 0.0]

 -
   time: [2.75, 3.25]
   joint_positions:
     <device_name>: [1.57, 0.0]

 -
   time: [4.0]
   joint_positions:
     <device_name>: [0.5, 0.0]
   joint_velocities:
     <device_name>: [-0.5, 0.0]

 -
   ...
```

6.5.2.7 API control

If you need a complex (i.e. real) control application, e.g. the *qbmove* is mounted on a robot which uses computer vision aid to grasp objects, the previous two control modes don't really help much. What we provide for real applications is the full ROS libraries to manage and control the *qbmove*.

You must dig into the `qb_move` package documentation and find what better suits for your needs, e.g. extend the `qbDeviceControl` class provided, or even redesign some of its parts by following an approach similar to ours.

IMPORTANT	Our recommendation is to use as much as possible our resources, classes and macros to help you while developing your application. Don't reinvent the wheel!

At last, if you come up with a something useful for the whole community, it will be amazing if you propose your improvement with a Pull Request in the package of interest on our Bitbucket.

6.5.3 ROS packages overview

You can find all the needed packages here:

- `qb_device:` http://wiki.ros.org/qb_device
- `qb_move:` http://wiki.ros.org/qb_move

7 Troubleshooting

This chapter explains how to solve problems that you may encounter in the process of building a robot, programming a robot file, or operating a robot platform.

7.1 Qbmove output shaft doesn't move smoothly

[Cause]

In some cases, qbmove's output shaft may get stiff and won't rotate smoothly when you try to move it with your hands. This is not product failure but a situation caused by the tight arrangement of the internal gears.
Tight gear arrangement is designed for precise motion control. So, you can see the robot moves smoothly without a problem when the assembly is finished and power is supplied to each of qbmove actuators

[Troubleshooting]

Solution 01

Turn the output shaft in the opposite direction first and try again to turn in the desired direction. If you can't provide enough force, use a provided flange to rotate the output shaft. Much greater torque can be leveraged and it's easier to rotate the shaft.

Solution 02

Connect qbmove to the PC and run "qbmove GUI". Make sure that the sliders of position and stiffness are in zero position, then activate the qbmove.
Once activated, you can move the device by moving the sliders. To reset the position to zero, click on "Zero" button. In this way, shaft will go to zero position and minimum stiffness configuration. You can then use the sliders to verify the correct behavior of the qbmove.

7.2 One or more qbmoves don't activate

[Cause]

The angular positions of actuator's internal shafts are too far from zero position.

[Troubleshooting]

Solution 01

Turn the output shaft back near the zero position. If you can't provide enough force, use a provided flange to rotate the output shaft or move directly the assembled robot.

Solution 02

Connect qbmove to the PC and run "qbmove GUI". Then click the button "Get Measurements". If one of the positions is higher than 13000 ticks, follow "Solution 1". Then you can try to activate the device.

7.3 Blue LED is off when the robot is powered

[Cause]

The blue LED is damaged or the actuator doesn't receive the electrical supply, directly from the power supply or from a previous actuator of the power chain.

[Troubleshooting]

Solution 01

Connect qbmove to your PC and run "qbmove GUI" (page 55), make sure that the sliders of position and stiffness are in zero position, then connect the power supply and active the qbmove.
If the device works properly and the blue LED is off, it means that the LED is damaged but you can continue using the device.
If the blue LED is off and the device doesn't move, change the daisy chain port.

7.4 White LED is off when you use the robot

[Cause]

The white LED is damaged or the actuator doesn't receive the electrical supply from a previous actuator of the power chain or from the USB cable.

[Troubleshooting]

Solution 01

Connect qbmove to your pc using the USB cable provided and run "qbmove GUI". If LED is still off and the device doesn't communicate, replace the USB cable.
If the qbmove communicate and the LED is off, the LED is damaged and you can continue using it.

Solution 02

If the interested qbmove is a part of power chain, replace the ERNI cable.
If the problem persists, follow the "Solution 1".

7.5 Clicking on "Scan Ports" on GUI results in no port shown

[Cause]

The COM port number is too high or there is a connection problem

[Troubleshooting]

Solution 01

Under Windows, try changing the COM port number by going under Control Panel > Hardware and Sound > Device Manager.
Open the Ports (COM & LPT) drop down menu, right click on the COM port and select Proprieties. Select the Port Settings tab and then click on Advanced. Once in Advanced menu select from the drop-down menu a COM number between COM1 and COM9 and click on OK.

Solution 02

Check if the one or more led is on, if it is. Try changing USB post on your computer. If it is not, change the USB cable or reboot your pc.

8 Commissioning and Maintenance

This chapter explains how to solve problems that you may encounter in the process of building a robot, programming a robot file, or operating a robot platform.

8.1 Commissioning

Hazards due to hot surfaces

Depending on the load and ambient temperature, the motor can overheat. Allow the motor to cool down after operation.

Risk of injury caused by protruding, rotating or moving parts of the driven mechanical units

Damage to the motor and/or Speed Controller because of incorrectly set control parameters

Before commissioning, check and if necessary adjust the configured parameters.

The drive performing unplanned movements during commissioning cannot be ruled out

Make sure that, even if the drive starts to move unintentionally, no danger can result for personnel or machinery

8.2 Maintenance and warranty

Products of the company qbrobotics s.r.l. are produced using the most modern production methods and are subject of strict quality inspections. All sales and deliveries are performed exclusively based on our General Conditions of Sale and Delivery which can be viewed on the qbrobotics home page www.qbrobotics.com.
The warranty will not be valid in case of tampering with the device, or with the software.

9 Appendix

9.1 VSA papers

A decoupled Impedance observer for a Variable Stiffness Robot

http://www.centropiaggio.unipi.it/publications/decoupled-impedance-observer-variable-stiffness-robot.html

A real time robust observer for an agonist antagonist variable stiffness actuator

http://www.centropiaggio.unipi.it/publications/real-time-robust-observer-agonist-antagonist-variable-stiffness-actuator.html

A Real-time Parametric Stiffness Observer for VSA devices

http://www.centropiaggio.unipi.it/publications/real-time-parametric-stiffness-observer-vsa-devices.html

A Stiffness Estimator for Agonistic–Antagonistic Variable-Stiffness-Actuator Devices

http://www.centropiaggio.unipi.it/publications/stiffness-estimator-agonistic%E2%80%93antagonistic-variable-stiffness-actuator-devices.html

Variable Stiffness Control for Oscillation Damping

http://www.centropiaggio.unipi.it/publications/variable-stiffness-control-oscillation-damping.html

Variable Stiffness Actuators: the user's point of view

http://www.centropiaggio.unipi.it/publications/variable-stiffness-actuators-user%E2%80%99s-point-view.html

Controlling Soft Robots: Balancing Feedback and Feedforward Elements

http://www.centropiaggio.unipi.it/publications/controlling-soft-robots-balancing-feedback-and-feedforward-elements.html

9.2 qbmove papers

VSA - CubeBot. A modular variable stiffness platform for multi degrees of freedom systems

http://www.centropiaggio.unipi.it/publications/vsa-cubebot-modular-variable-stiffness-platform-multi-degrees-freedom-systems.html

Towards variable impedance assembly: the VSA peg-in-hole

http://www.centropiaggio.unipi.it/publications/towards-variable-impedance-assembly-vsa-peg-hole.html

Passive impedance control of a Qboid multi-DOF VSA-CubeBot manipulator

http://www.centropiaggio.unipi.it/publications/passive-impedance-control-qboid-multi-dof-vsa-cubebot-manipulator.html

Open Source VSA-CubeBots for Rapid Soft Robot Prototyping

http://www.centropiaggio.unipi.it/publications/open-source-vsa-cubebots-rapid-soft-robot-prototyping.html

Robust Optimization of System Compliance for Physical Interaction in Uncertain Scenarios

http://www.centropiaggio.unipi.it/publications/robust-optimization-system-compliance-physical-interaction-uncertain-scenarios.html